240023

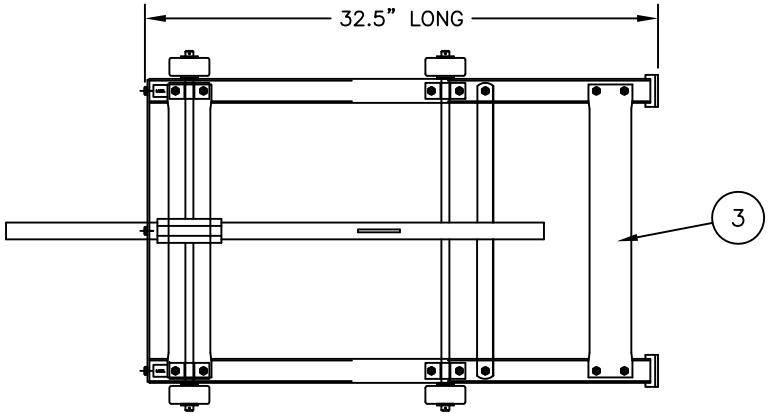

P/N	240023
Model:	CWO–10
Wheel Position:	Outboard
Capacity:	600 lbs
Weight:	32 lbs
Tipping Lever:	Yes
Box:	Yes

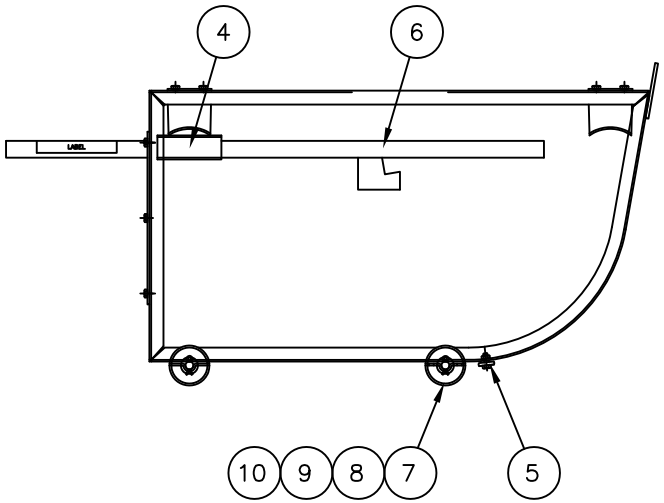

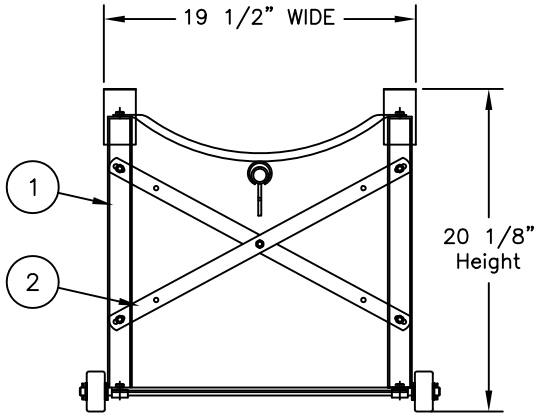

REPLACEMENT PARTS LIST

	1	054178	CRADLE: FRAME, SALES ITEM	2
	2	054177	BRACE: CROSS, SALES ITEM	2
	3	051349	BRACE: SADDLE, SALES ITEM	1
	4	054176	WELDMENT: SADDLE, SLOTTED SALES ITEM	1
	5	054179	BAR: SPREADER, BOTTOM SALES ITEM	1
	6	054175	WELDMENT: TILT BAR SALES ITEM	1
	7	050334	AXLE: (22–1/2") (CWO SERIES)	2
	8	053011	PACK: WHEELS, DRUM CRADLES	1
		150103	WHEEL: 2.5 x1–1/8, POLYOLEFIN	4
	9	108529	KIT: HARDWARE	1
	10	053432	HARDWARE: BAGGED (CWO5/10)	1
*	11	108246	BOX: CW–10	1
*	12	240061	KIT: K–1 CONVERSION 'C' CRADLE TO 'CW'	1
			DRIP TRAY OPTION	
*	13	270413	KIT: DRIP TRAY W/ASBORBENT PAN	1
		151291	DRIP PAN	1
		170650	KIT: DRIP TRAY	1
*	14	270414	KIT: DRIP PAN	1
*	15	270415	KIT: DRIP TRAY W/O ABSORB. PAN	1
		055200	DRIP PAN WELDMENT	1
		055201	DRIP PAN BRACKET WELDMENT	1

STANDARD DRUM CRADLES

- Economical and convenient way to tip, drain and store 55 gallon drums.
- Easy for one person to use.
- All models ship knocked down and boxed via UPS.
- Models available with 2.5" polyolefin wheels, self–storing load tipping lever, and swivel casters.
- Drip tray option available for all models.
- Drum distance to floor on models without wheels is 13.5"

DRIP TRAY Features:

- Steel slide out tray 9.75" x 9.75" x 1.75" lip.
- Fits all Drum Cradles.
- Polyethylene pan
- Cellulose absorbent holds 3 quarts of liquid.

THIS DRAWING IN ALL PARTICULARS IS WESCO INDUSTRIAL PRODUCTS INC. PROPERTY. ALL RIGHTS OF DESIGN, INVENTION OR USE OF ARE RESERVED.

PRINT ISSUED
NOV 20, 2006
WESCO MANUFACTURING ENGINEERING DEPARTMENT

REV.	ECN & DATE	APP.
E	UPDATED 11–29–12	R W S

REVISIONS

WESCO INDUSTRIAL PRODUCTS INC.
NORTH WALES PENNA. 19454

PART NAME: CWO–10 Drum Cradles

TOLERANCE UNLESS OTHERWISE SPECIFIED

FRACTION	3 PLACE DECIMAL	2 PLACE DECIMAL
± 1/64	± .005	± .01

ANGULAR ± 1–1/2° SHEET 1 OF 1
BREAK ALL SHARP EDGES AND REMOVE ALL BURRS

DRAWN:
CHECKED:
APP. ENGR.
SCALE: 1" = 6"
C–240023 REV E