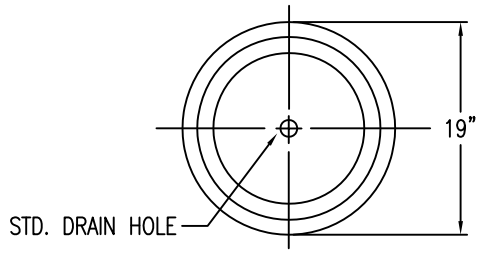

TOP VIEW

TF2020

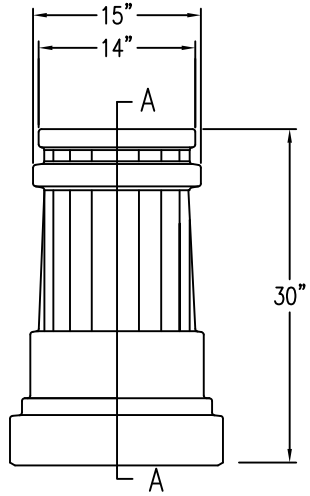

FRONT VIEW

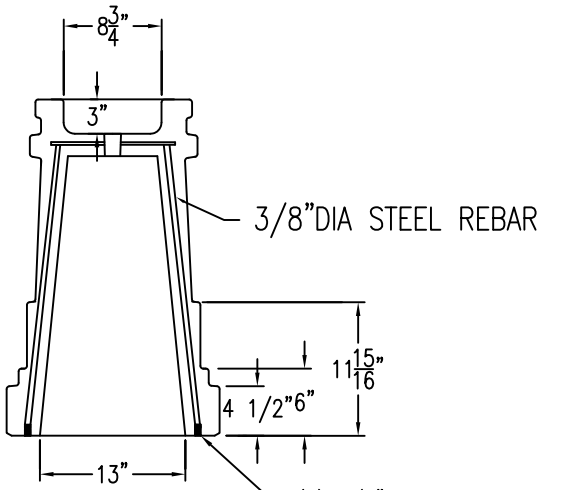

SECTION A–A

CONFIDENTIAL INFORMATION
These drawings, specifications and the other information and documents accompanying them are the confidential and proprietary property of Wausau Tile, Inc. The drawings themselves shall belong to the owner for use only on this project. Any additional use shall require the prior written approval of Wausau Tile, Inc. The proprietary information contained within the drawings and the documents is and shall remaiin the sole property of Wausau Tile, Inc.

WAUSAU TILE SITE FURNISHINGS

P.O. BOX 1520 WAUSAU, WISCONSIN 54402-1520 800/388-8728
P.O. BOX 967 BANNING, CALIFORNIA 92220 877-849-5695

REVISIONS									
NO.	DATE	BY	NO.	DATE	BY	DRAWN BY RJH	JOB TF2020		MATERIAL CONCRETE
						TITLE TF2020	LOCATION:		WEIGHT 260 LBS
1			4			SCALE 1/8" = 1"	UNLESS OTHERWISE SPECIFIED DIMENSIONS ARE IN INCHES ANGLES ±0.5° 2 PL ±0.01 3 PL ±0.005	DATE 8/4/06	FINISH OPTIONS XXXX
2			5						
3			6			JOB NO: XXXXXX			DWG. NO. 006-8-328