WATERLOO

Waterloo Replacement Ceramic Faucet Cartridge Repair Kit with Hot Handle

#750HHCRD

Item #: 750HHCRD Qty: _____

Project: _____

Approval: _____ Date: _____

Features

- **Contains replacement ceramic cartridge and handle**
- **Hot handle index**
- **Direct replacement for original part**

Certifications

CSA, US and Canada NSF Listed

Technical Data	
Features	ASME A112.18.1-2018 / CSA B125.1-18 California AB100 Compliant NSF Listed NSF/ANSI 372 NSF/ANSI 61
Type	Repair Kits

© 2024 Waterloo

Plan View

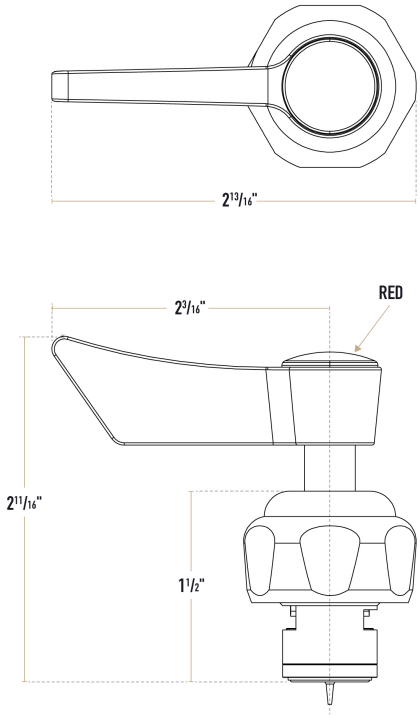

Notes & Details

This Waterloo cartridge repair kit is a direct replacement for the one that came standard with select Waterloo faucets and pre-rinses. This kit contains everything you need to quickly fix a hot-side handle in a convenient cartridge design that takes less time to replace than fixing individual components. It includes a ceramic cartridge, which provides a much lower fail rate than the compression cartridges widely used in the industry. In this design, 2 ceramic discs fit together to create a watertight seal when closed. This removes the need for a rubber seat washer, which is one of the most frequently replaced parts on a faucet. It also includes a red handle index, and a replacement handle.

⚠ **WARNING:** This product can expose you to chemicals including lead, which are known to the State of California to cause cancer and birth defects or other reproductive harm. For more information, go to www.p65warnings.ca.gov.

© 2024 Waterloo