WATERLOO

Waterloo 8" Countertop Glass Filler

#750GFN8

Item #: 750GFN8 Qty: _____

Project: _____

Approval: _____ Date: _____

Features

- **8" of clearance, perfect for filling water glasses and pitchers**
- **Flow rate of 1.2 GPM and 60 PSI**
- **Single hole base**
- **1/2" NPT inlet**
- **Rough-in: 7/8" round hole, maximum counter thickness: 2"**

Certifications

CSA, US and Canada

NSF Listed

1/2" Water Connection

Technical Data

Spout Length	3 7/8 Inches
Faucet Height	10 Inches
Faucet Centers	Single
Features	ASME A112.18.1-2018 / CSA B125.1-18 California AB100 Compliant NSF/ANSI 372 NSF/ANSI 61
Finish	Chrome
Flow Rate	1.2 GPM
Installation Type	Deck Mounted

© 2024 Waterloo

Technical Data

Material	Brass
Number of Faucets	1 Faucets
Pressure Rating	60 PSI
Spout Clearance	8 Inches
Style	Push Back
Type	Glass Fillers
Water Inlet Size	1/2 Inches

© 2024 Waterloo

Plan View

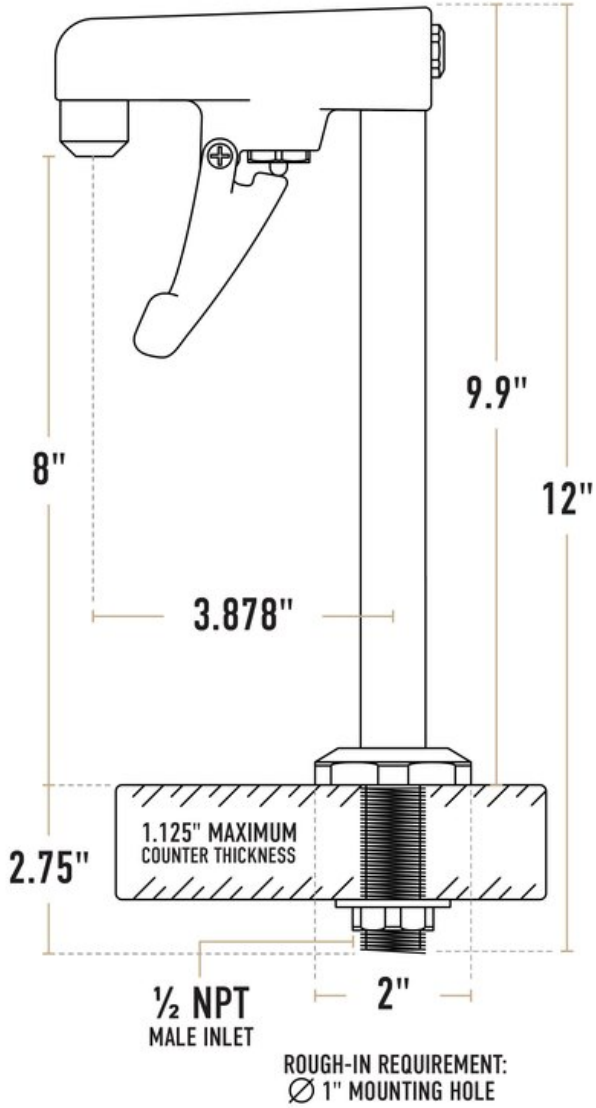

Notes & Details

This Waterloo countertop glass filler is the perfect solution when you need a dedicated area for filling cups with fresh, clean drinking water! Providing 8" of clearance, it boasts plenty of room to accommodate all kinds of glassware, while its deck-mounted design and single hole base make it easy to install. With a dedicated glass filler, you can also give your waitstaff more flexibility by placing it in the most convenient location for your workflow.

An intuitive and familiar lever design makes it easy to use, too - just push the cup back against the lever and it will dispense from the nozzle. It's a great way to improve workflow and ensure all of your customers get a glass of clean, refreshing water. It installs using a 1/2" NPT male inlet. It requires a 7/8" round hole for installation, and works on countertops up to 2" thick.

© 2024 Waterloo

⚠ **WARNING:** This product can expose you to chemicals including lead, which are known to the State of California to cause cancer and birth defects or other reproductive harm. For more information, go to www.p65warnings.ca.gov.

© 2024 Waterloo