WATERLOO

# Waterloo 10" x 14" x 5" 18 Gauge Stainless Steel One Compartment Drop-In Sink with 8" Gooseneck Faucet and Side Splashes

#750DI1145SW

Item #: 750DI1145SW Qty: _____

Project: _____

Approval: _____ Date: _____

## Features

- Seamless deep drawn sink bowl for easy cleaning
- Innovative self rim design allows flush mounting into any countertop
- Comes with sound deadening patches to reduce ambient noise in your kitchen
- Includes an 8" Waterloo gooseneck faucet with 4" centers and a 2 GPM flow rate
- 10" x 14" x 5" bowl size

## Certifications

NSF Listed

½" 1/2" Water Connection

| Technical Data | |
|---|---|
| Length | 13 Inches |
| Width | 19 Inches |
| Height | 10 Inches |
| Spout Length | 8 Inches |
| Bowl Depth | 5 Inches |
| Faucet Height | 14 11/16 Inches |
| Basket Drain Size | 3 1/2 Inches |
| Bowl Front to Back | 14 Inches |
| Bowl Left to Right | 10 Inches |
| Color | Silver |

© 2024 Waterloo

## Technical Data

| | |
|---|---|
| Edge Style | Flush |
| Faucet Centers | 4 Inches |
| Features | California AB100 Compliant<br>Faucet Included<br>NSF Listed<br>Side Splashes |
| Flow Rate | 2 GPM |
| Gauge | 18 Gauge |
| Handle Type | Lever |
| Installation Type | Drop In |
| Material | Stainless Steel |
| Number of Compartments | 1 Compartment |
| Spout Clearance | 10 Inches |
| Spout Type | Gooseneck |
| Stainless Steel Type | Type 304 |
| Type | Drop-In Sinks |
| Water Inlet Size | 1/2 Inches |

© 2024 Waterloo

# Plan View

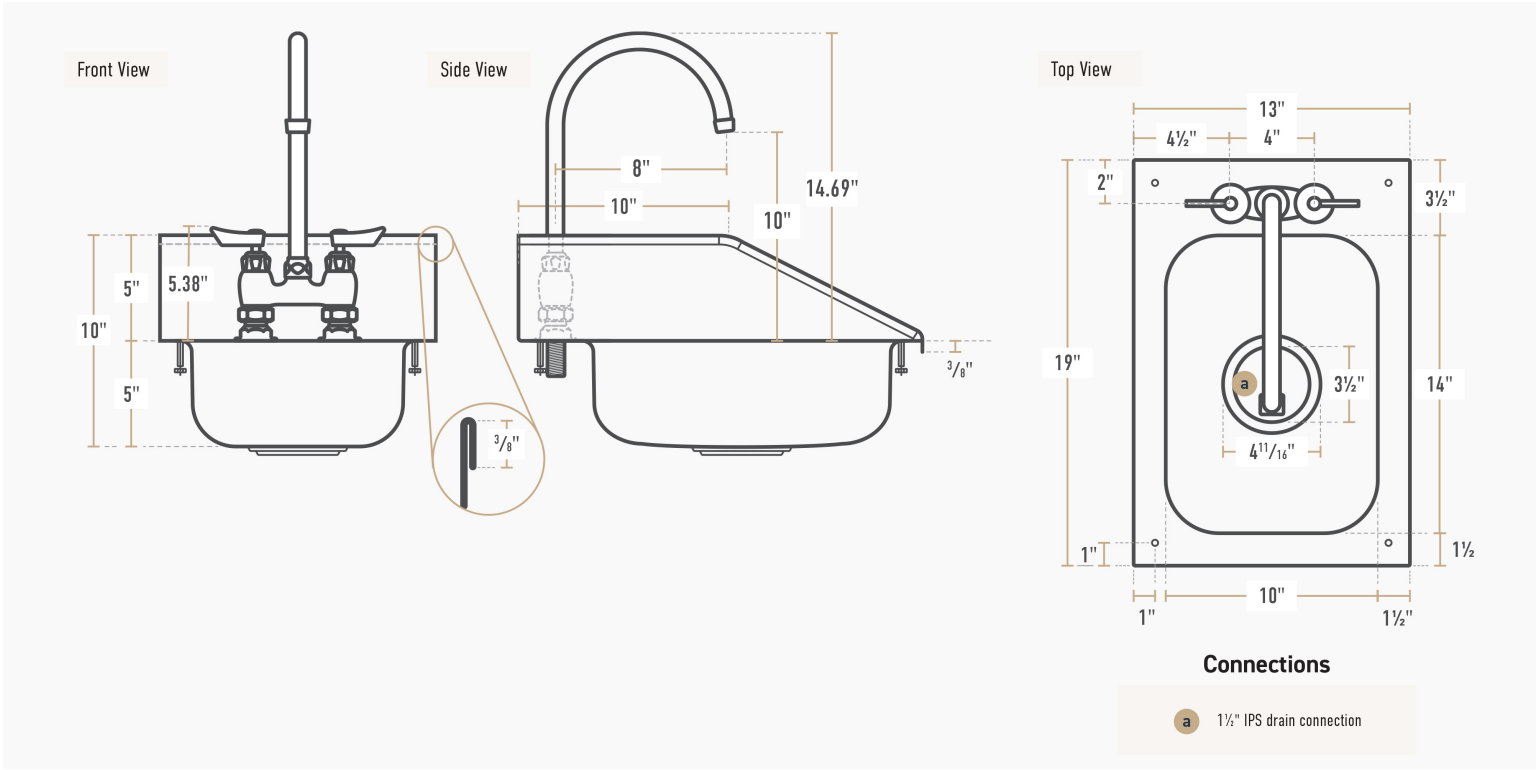


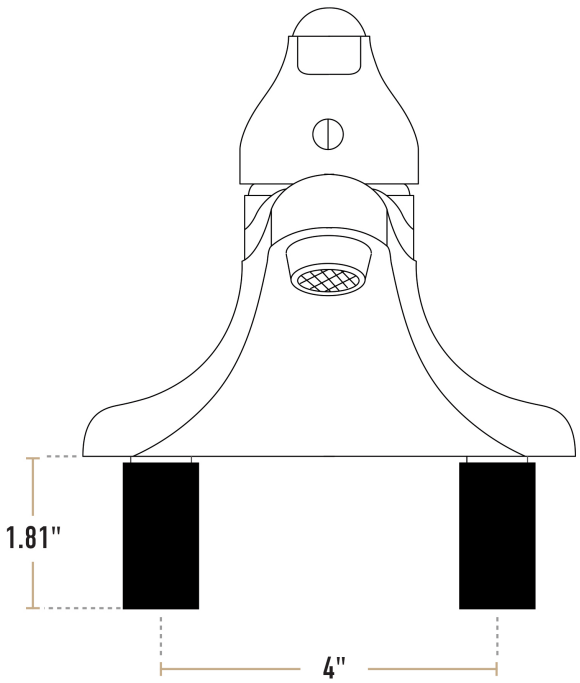


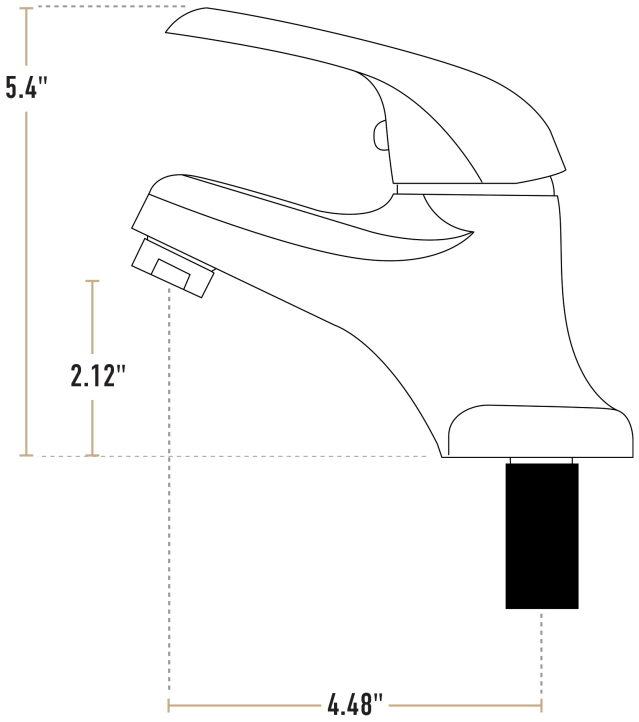


© 2024 Waterloo

# Notes & Details

Equip your kitchen, prep area, or bar with this Waterloo 10" x 14" x 5" 18 gauge stainless steel one compartment drop-in sink with an 8" gooseneck faucet. This sink features a drop-in design that fits down through the top of your counter. It has an innovative self rim design along the top to provide a professional appearance once it's installed in any countertop. Plus, this sink comes with side splashes to protect surrounding countertops from contaminated water.

Designed for durability, corrosion resistance, and sanitation, this sink's bowl is made of seamless deep drawn 18 gauge, type 304 stainless steel. Plus, the 3 1/2" drain is ready for installation so you can get your new sink up and running.

This Waterloo sink comes with a faucet so you don't need to worry about purchasing a compatible faucet separately. The 8" gooseneck faucet with 4" centers and a 2 GPM flow rate means you'll be able to start using your sink right away. This model comes with the hardware you will need for installation.

⚠ **WARNING:** This product can expose you to chemicals including Lead and Nickel, which are known to the State of California to cause cancer, birth defects, or other reproductive harm. For more information, go to www.p65warnings.ca.gov.

© 2024 Waterloo