HD 15-A

ACTIVE TWO-WAY SPEAKER

DESCRIPTION

The HD 15-A is a unique product in its category. The professional compression driver with custom designed dome and high-power voice coil offers exceptional vocal clarity and sound projection. The 15” high power woofer offers an extremely linear response and a precise, deep low-frequency control. The amplifier delivers 1400 watts and is controlled by a powerful DSP that takes care of crossover, equalization, FiRPHASE, soft limiting and speaker protection.

FEATURES

- 130 dB Max SPL
- 1400 Watts 2-way peak power
- DSP Processing with FiRPHASE
- 1.0″ Compression Driver, 1.75” v.c.
- 15” Woofer, high power
- Lightweight Composite Cabinet
- 90°x60°, wide dispersion constant directivity horn
- Silent Fanless Class-D Amplifier

TECHNICAL SPECIFICATIONS

Acoustical specifications	Frequency Response:	45 Hz ÷ 20000 Hz
	Max SPL @ 1m:	130 dB
	Horizontal coverage angle:	90°
	Vertical coverage angle:	60°
Transducers	Compression Driver:	1.0", 1.75" v.c
	Woofer:	15", 2.5" v.c
Input/Output section	Input signal:	bal/unbal
	Input connectors:	XLR, Jack
	Output connectors:	XLR
	Input sensitivity:	-2 dBu/+4 dBu
	Mic. Input Sensitivity:	-32 dBu
Processor section	Crossover Frequencies:	1800 Hz
	Protections:	Thermal, RMS
	Limiter:	Soft Limiter
	Controls:	Volume, Boost, Mic/Line
Power section	Total Power:	1400 W Peak, 700 W RMS
	High frequencies:	400 W Peak, 200 W RMS
	Low frequencies:	1000 W Peak, 500 W RMS
	Cooling:	Convection
	Connections:	VDE
Physical specifications	Cabinet/Case Material:	PP Composite
	Hardware:	1 x M10 top, 1 x M10 bottom, 2 x M10 side
	Handles:	1 Top, 2 Side
	Grille:	Steel
	Color:	Black
Size	Height:	714 mm / 28.11 inches
	Width:	442 mm / 17.4 inches
	Depth:	397 mm / 15.63 inches
	Weight:	22 kg / 48.5 lbs
Shipping informations	Package Height:	700 mm / 27.56 inches
	Package Width:	450 mm / 17.72 inches
	Package Depth:	500 mm / 19.69 inches
	Package Weight:	24.5 kg / 54.01 lbs

RCF products are continually improved. All specifications are therefore subject to change without notice.

PART NUMBER

- **13000590**
  HD 15-A
  115V
  EAN 8024530016678
- **13000589**
  HD 15-A
  220-240V
  EAN 8024530016647

RCF products are continually improved. All specifications are therefore subject to change without notice.

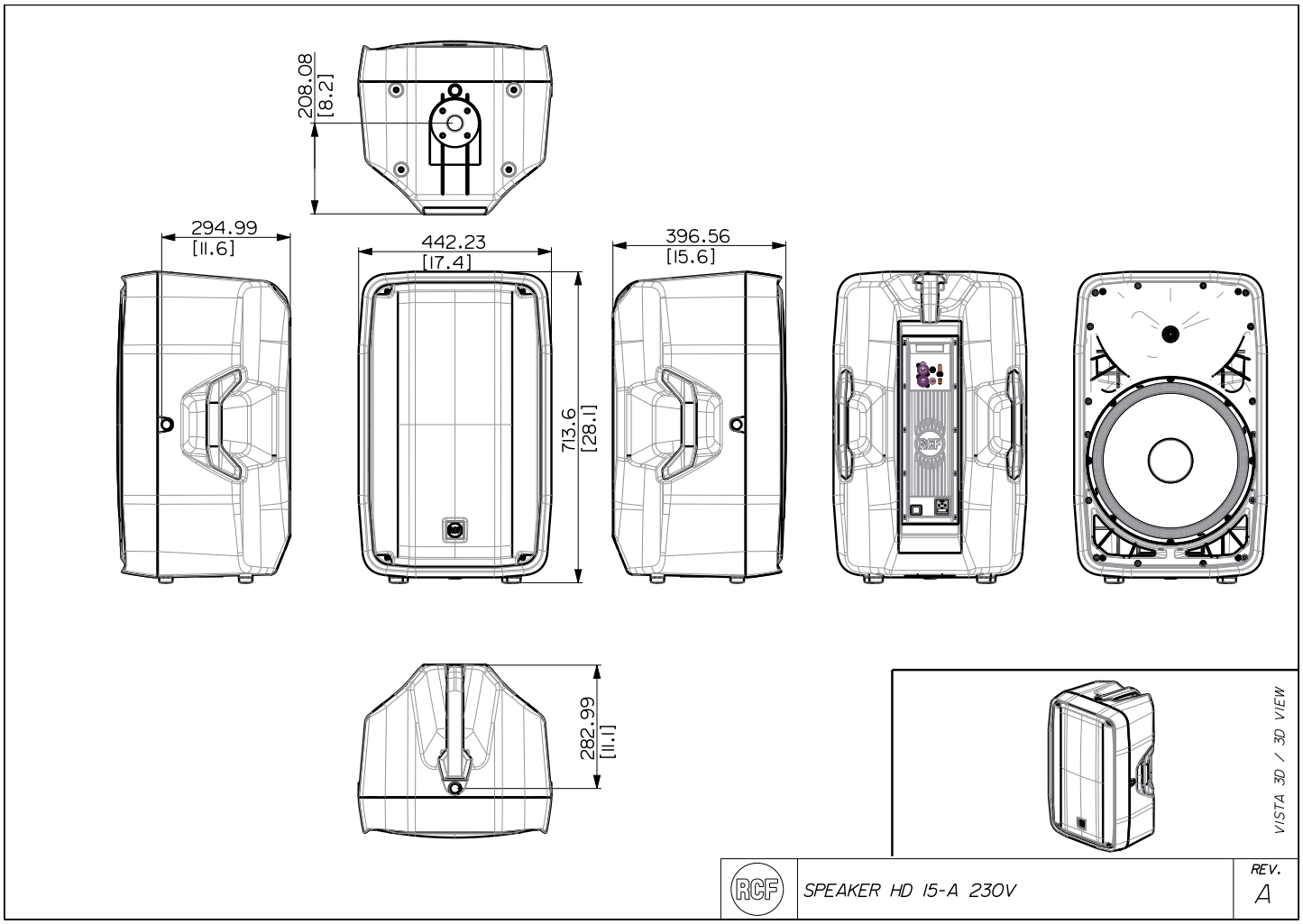
208.08
[8.2]
294.99
[11.6]
442.23
[17.4]
713.6
[28.1]
396.56
[15.6]
282.99
[11.1]
VISTA 3D / 3D VIEW
SPEAKER HD 15-A 230V
REV.
A

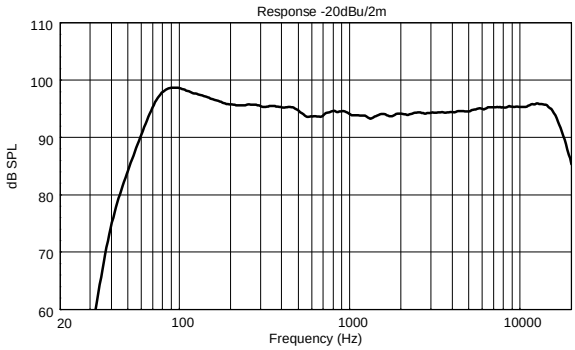
Response -20dBu/2m
dB SPL
110
100
90
80
70
60
20
100
1000
10000
Frequency (Hz)

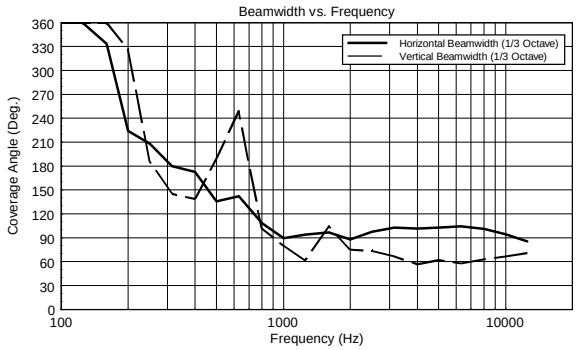
Beamwidth vs. Frequency
Horizontal Beamwidth (1/3 Octave)
Vertical Beamwidth (1/3 Octave)
Coverage Angle (Deg.)
360
330
300
270
240
210
180
150
120
90
60
30
0
100
1000
10000
Frequency (Hz)

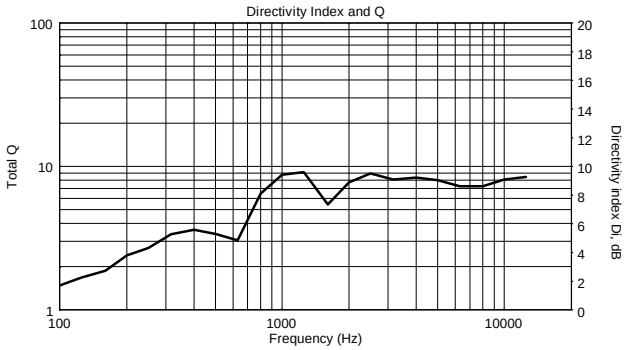
Directivity Index and Q
Total Q
100
10
1
Directivity index Di, dB
20
18
16
14
12
10
8
6
4
2
0
100
1000
10000
Frequency (Hz)

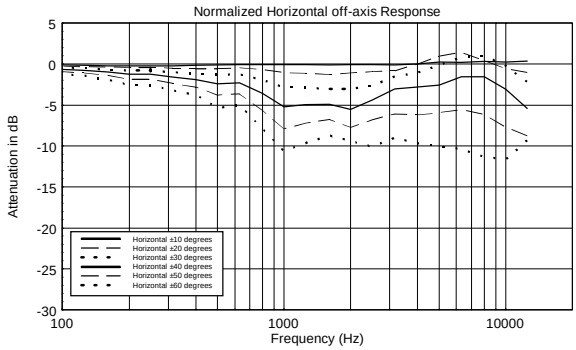
Normalized Horizontal off-axis Response
Attenuation in dB
5
0
-5
-10
-15
-20
-25
-30
Horizontal ±10 degrees
Horizontal ±20 degrees
Horizontal ±30 degrees
Horizontal ±40 degrees
Horizontal ±50 degrees
Horizontal ±60 degrees
100
1000
10000
Frequency (Hz)

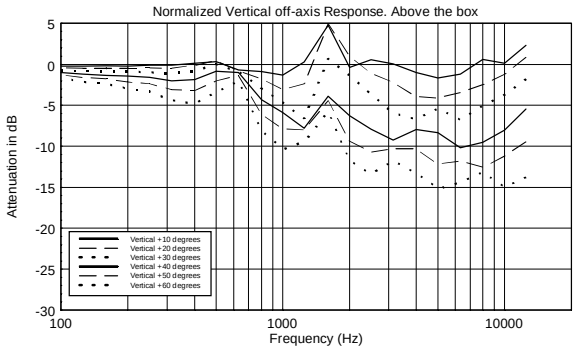
Normalized Vertical off-axis Response. Above the box
Attenuation in dB
5
0
-5
-10
-15
-20
-25
-30
Vertical +10 degrees
Vertical +20 degrees
Vertical +30 degrees
Vertical +40 degrees
Vertical +50 degrees
Vertical +60 degrees
100
1000
10000
Frequency (Hz)

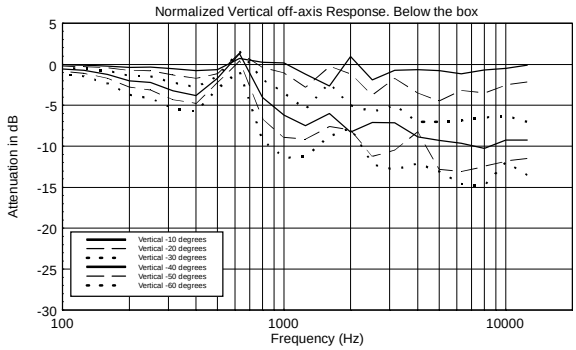
Normalized Vertical off-axis Response. Below the box
Attenuation in dB
5
0
-5
-10
-15
-20
-25
-30
Vertical -10 degrees
Vertical -20 degrees
Vertical -30 degrees
Vertical -40 degrees
Vertical -50 degrees
Vertical -60 degrees
100
1000
10000
Frequency (Hz)

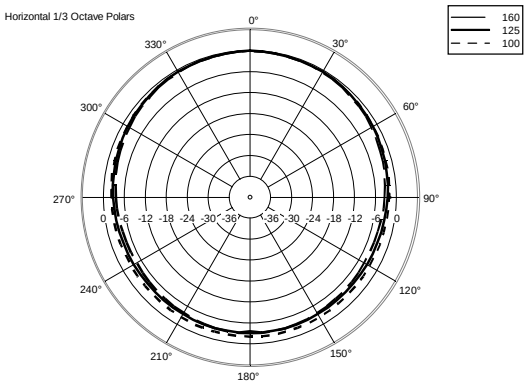
Horizontal 1/3 Octave Polars
160
125
100

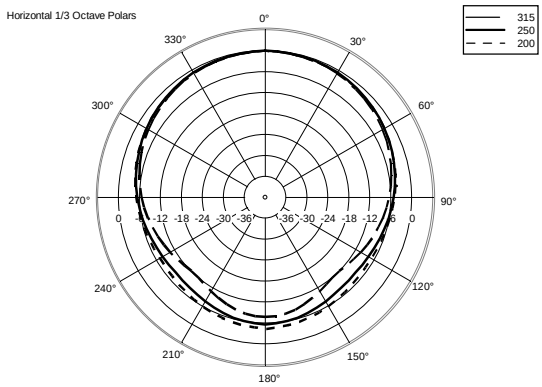
Horizontal 1/3 Octave Polars
315
250
200

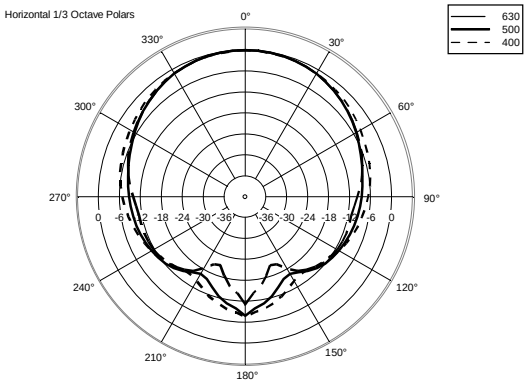
Horizontal 1/3 Octave Polars
630
500
400

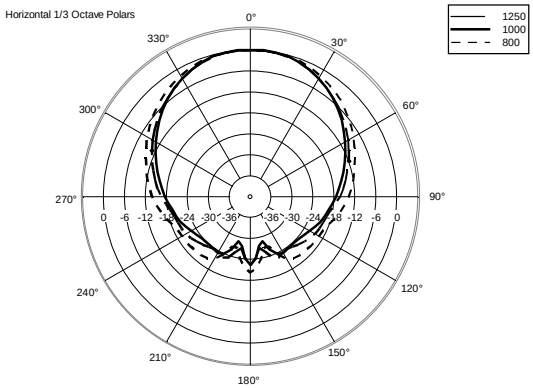
Horizontal 1/3 Octave Polars
1250
1000
800

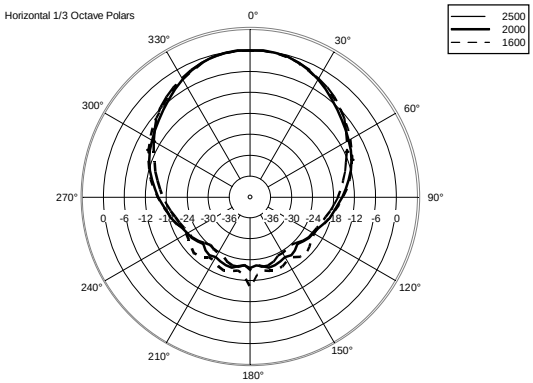
Horizontal 1/3 Octave Polars
2500
2000
1600

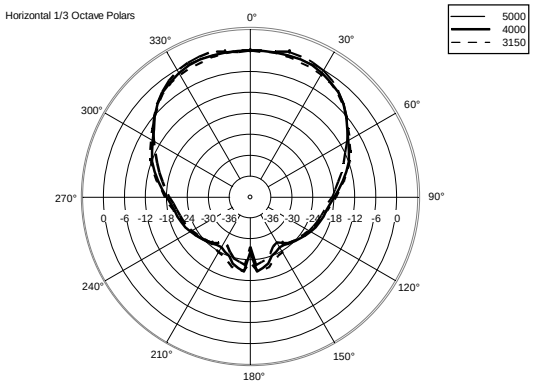
Horizontal 1/3 Octave Polars
5000
4000
3150

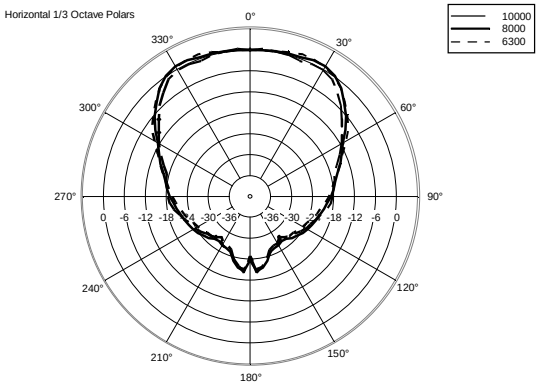
Horizontal 1/3 Octave Polars
10000
8000
6300

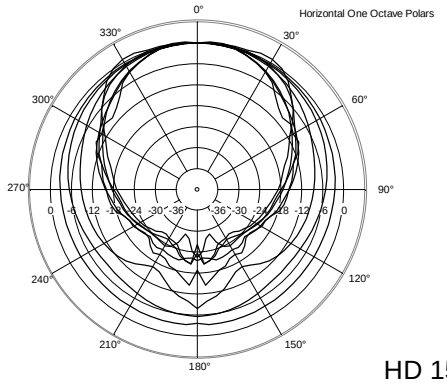
Horizontal One Octave Polars

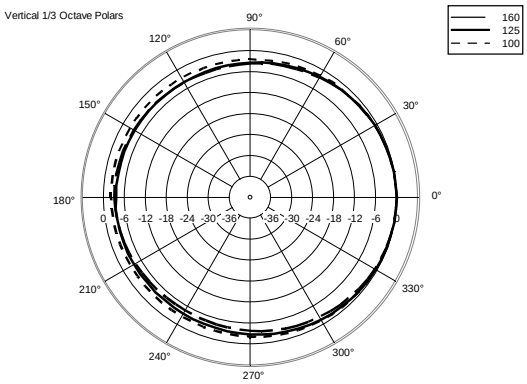
Vertical 1/3 Octave Polars
160
125
100

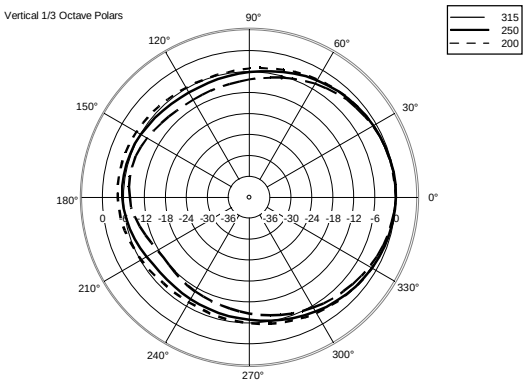
Vertical 1/3 Octave Polars
315
250
200

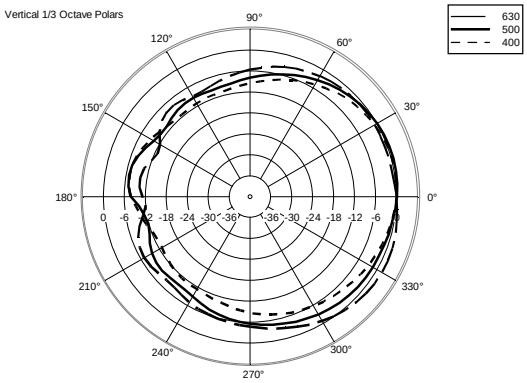
Vertical 1/3 Octave Polars
630
500
400

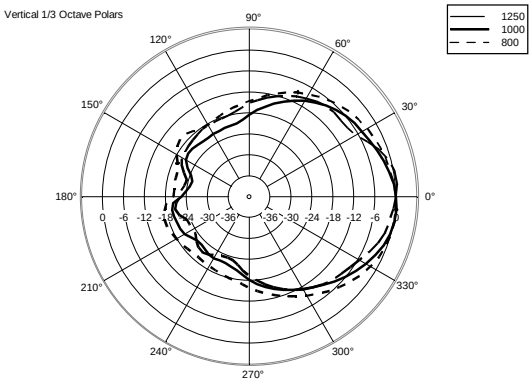
Vertical 1/3 Octave Polars
1250
1000
800

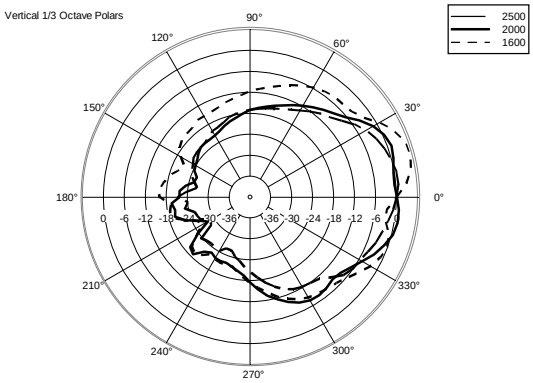
Vertical 1/3 Octave Polars
2500
2000
1600

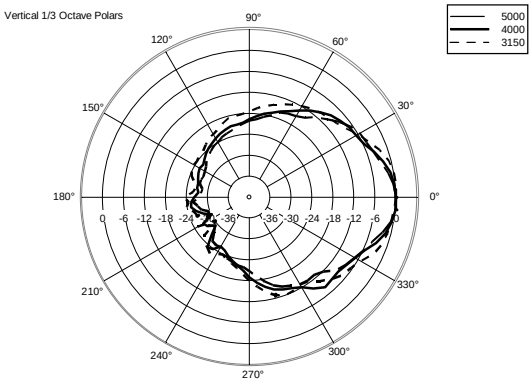
Vertical 1/3 Octave Polars
5000
4000
3150

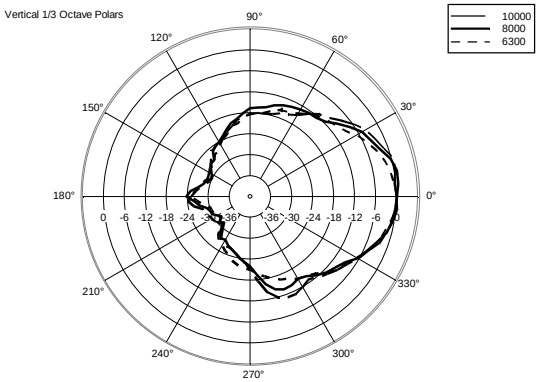
Vertical 1/3 Octave Polars
10000
8000
6300

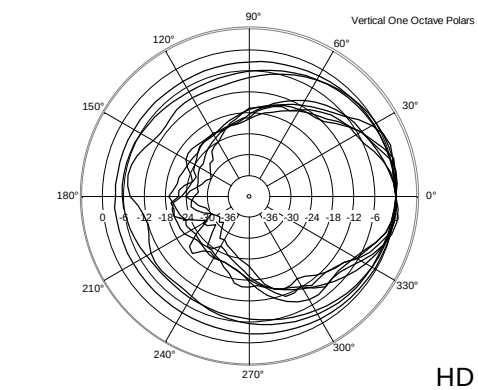
Vertical One Octave Polars

ACCESSORIES

	AC PM-M20	PART NUMBER EAN:	**13360067** 8024530014599
	AC PMX POLE MOUNT M20	PART NUMBER EAN:	**13360232** 8024530010058
	AC PRO-FS PROFESS. LOCKING FLOOR STAND	PART NUMBER EAN:	**13360109** 8024530006471
	AC PRO-PM PROFESS. LOCKING POLE MOUNT	PART NUMBER EAN:	**13360110** 8024530006488
	COVER CVR HD 15	PART NUMBER EAN:	**13360438** 8024530016708
	KIT EYEBOLT 4 X	PART NUMBER EAN:	**13360031** 8024530018870