HD 12-A MK5

ACTIVE TWO-WAY SPEAKER

DESCRIPTION

HD 12-A mk5 active speaker boosts performance with a high-power professional 12″ woofer and a 1.4″ HF driver, a 1400W 2ch Class-D amplifier, and innovative FiRPHASE and Bass Motion Control processing. Vocals are natural, the sound is clear at long distances, SPL power is stable at very high levels. The strength of HD series speakers comes from decades of experience building gear for the touring industry, equipping this compact cabinet with power and reliability expected for life on the road. Elegantly designed, the lightweight polypropylene cabinet with internal reinforcement offers maximum strength. The speaker also includes a steel pole mount, threaded inserts for rigging, and rubber handgrips. D-LINE offers working DJs and musicians professional sound designed with music in mind.

FEATURES

- 130 dB Max SPL
- 1400 Watts 2-way amplifier
- DSP Processing with FiRPHASE and Bass Motion Control
- 1.4” HF driver
- 12” woofer, high power, 2.5” voice coil
- 90° x 60°, wide dispersion constant directivity horn
- Silent Fan-less Class-D Amplifier
- Mylar/Ferrite driver - Kapton former coil

TECHNICAL SPECIFICATIONS

Acoustical specifications	Frequency Response:	45 Hz ÷ 20000 Hz
	Max SPL @ 1m:	130 dB
	Horizontal coverage angle:	90°
	Vertical coverage angle:	60°
Transducers	Compression Driver:	1 x 1.0", 1.4" v.c
	Woofer:	12", 2.5" v.c
Input/Output section	Input signal:	bal/unbal
	Input connectors:	XLR, Jack
	Output connectors:	XLR
	Input sensitivity:	-2 dBu/+4 dBu
	Mic. Input Sensitivity:	-32 dBu
Processor section	Crossover Frequencies:	1800 Hz
	Protections:	Thermal, RMS
	Limiter:	Soft Limiter
	Controls:	Volume, Boost, Mic/Line
Power section	Total Power:	1400 W Peak, 700 W RMS
	High frequencies:	400 W Peak, 200 W RMS
	Low frequencies:	1000 W Peak, 500 W RMS
	Cooling:	Convection
	Connections:	VDE
Standard compliance	Safety agency:	CE compliant
Physical specifications	Cabinet/Case Material:	PP Composite
	Hardware:	1 x M10 top, 1 x M10 bottom
	Handles:	1 Top, 2 Side
	Pole mount/Cap:	Yes
	Grille:	Steel
	Color:	Black
Size	Height:	647 mm / 25.47 inches
	Width:	380 mm / 14.96 inches
	Depth:	380 mm / 14.96 inches
	Weight:	18.3 kg / 40.34 lbs
Shipping information	Package Height:	700 mm / 27.56 inches
	Package Width:	440 mm / 17.32 inches
	Package Depth:	430 mm / 16.93 inches
	Package Weight:	21.4 kg / 47.18 lbs

RCF products are continually improved. All specifications are therefore subject to change without notice.

PART NUMBER

- **13000684**
  HD 12-A MK5
  115V
  EAN 8024530019525
- **13000669**
  HD 12-A MK5
  220-240V
  EAN 8024530019013

RCF products are continually improved. All specifications are therefore subject to change without notice.

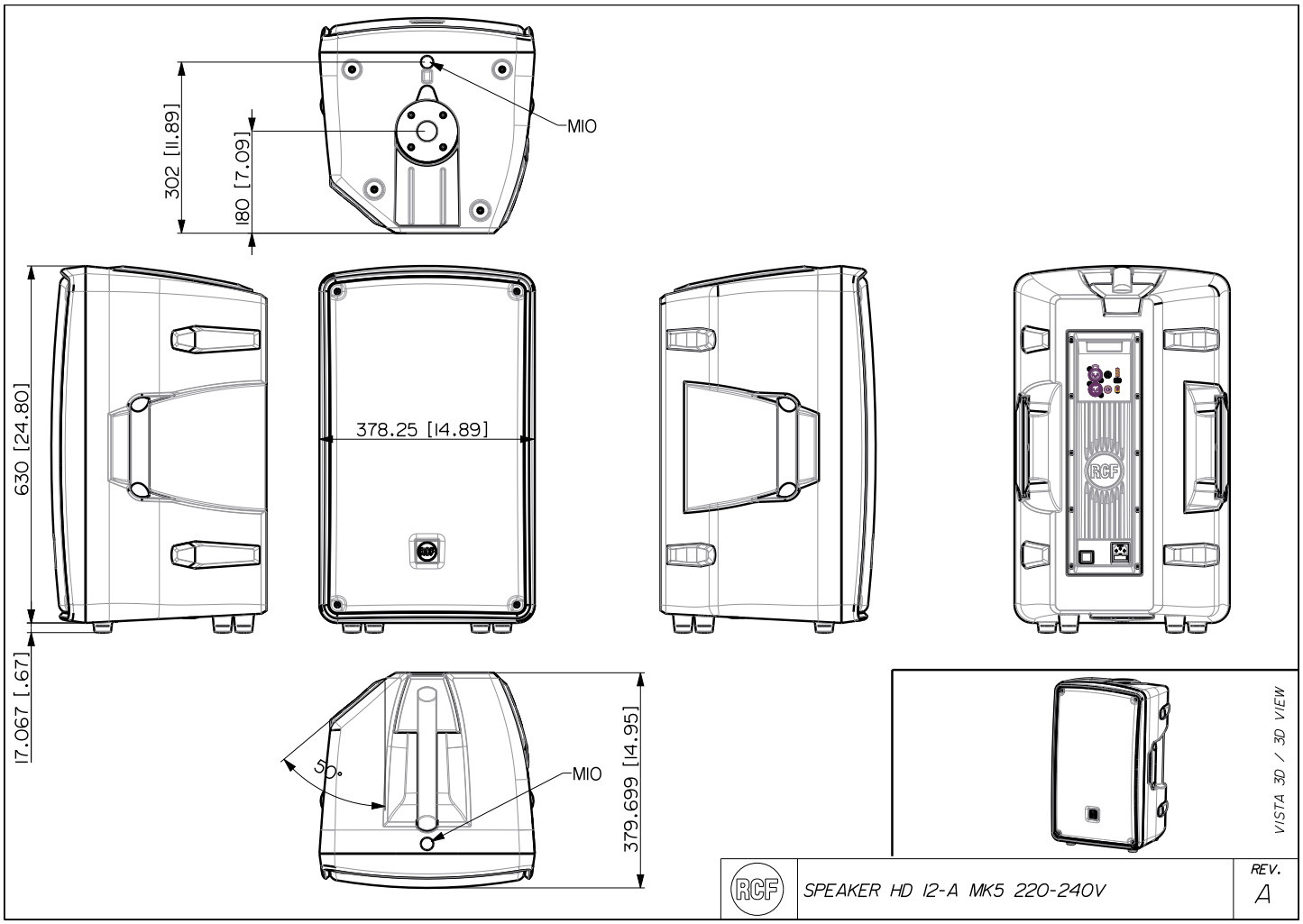
302 [11.89]
180 [7.09]
MIO
630 [24.80]
378.25 [14.89]
17.067 [.67]
50°
MIO
379.699 [14.95]
VISTA 3D / 3D VIEW
SPEAKER HD 12-A MK5 220-240V
REV.
A

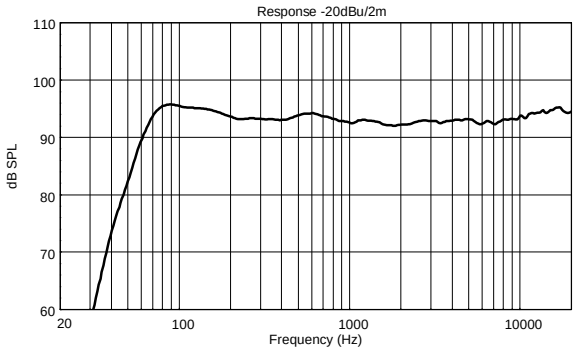
Response -20dBu/2m
dB SPL
110
100
90
80
70
60
20
100
1000
10000
Frequency (Hz)

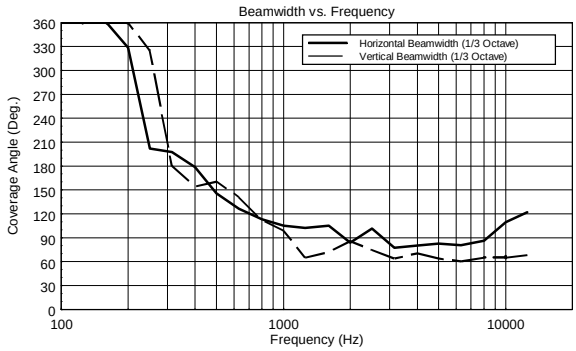
Beamwidth vs. Frequency
Horizontal Beamwidth (1/3 Octave)
Vertical Beamwidth (1/3 Octave)
Coverage Angle (Deg.)
360
330
300
270
240
210
180
150
120
90
60
30
0
100
1000
10000
Frequency (Hz)

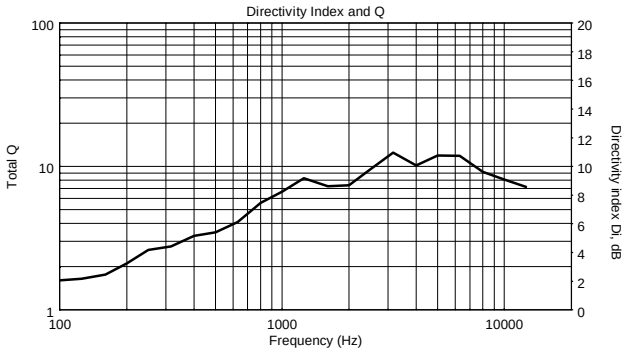
Directivity Index and Q
Total Q
100
10
1
Directivity index Di, dB
20
18
16
14
12
10
8
6
4
2
0
100
1000
10000
Frequency (Hz)

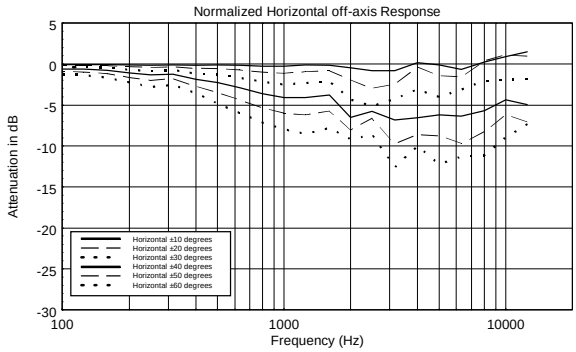
Normalized Horizontal off-axis Response
Attenuation in dB
5
0
-5
-10
-15
-20
-25
-30
Horizontal ±10 degrees
Horizontal ±20 degrees
Horizontal ±30 degrees
Horizontal ±40 degrees
Horizontal ±50 degrees
Horizontal ±60 degrees
100
1000
10000
Frequency (Hz)

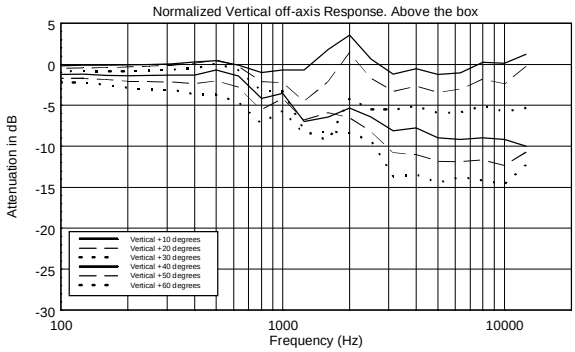
Normalized Vertical off-axis Response. Above the box
Attenuation in dB
5
0
-5
-10
-15
-20
-25
-30
Vertical +10 degrees
Vertical +20 degrees
Vertical +30 degrees
Vertical +40 degrees
Vertical +50 degrees
Vertical +60 degrees
100
1000
10000
Frequency (Hz)

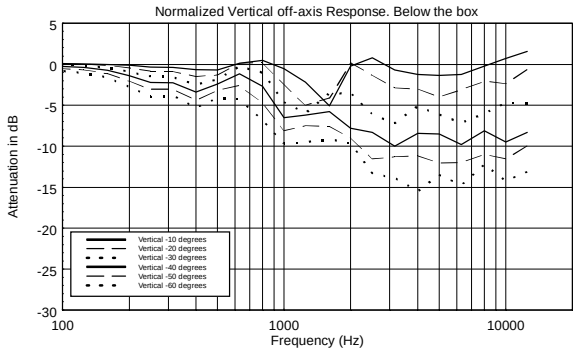
Normalized Vertical off-axis Response. Below the box
Attenuation in dB
5
0
-5
-10
-15
-20
-25
-30
Vertical -10 degrees
Vertical -20 degrees
Vertical -30 degrees
Vertical -40 degrees
Vertical -50 degrees
Vertical -60 degrees
100
1000
10000
Frequency (Hz)

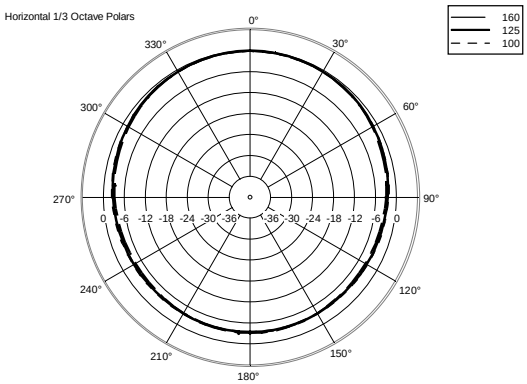
Horizontal 1/3 Octave Polars
160
125
100

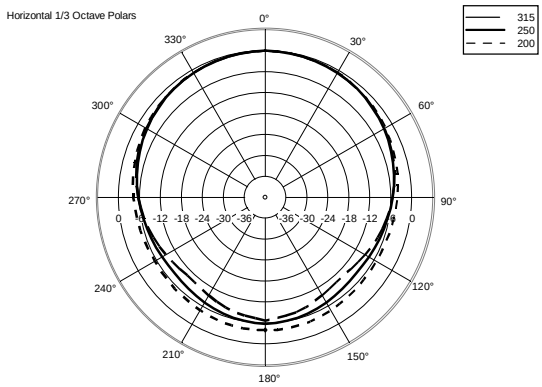
Horizontal 1/3 Octave Polars
315
250
200

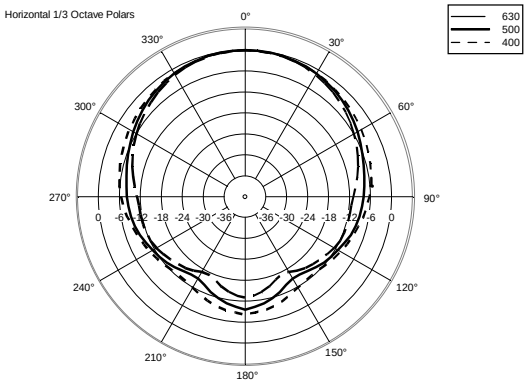
Horizontal 1/3 Octave Polars
630
500
400

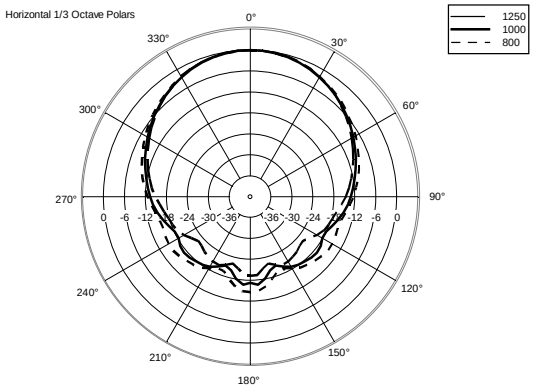
Horizontal 1/3 Octave Polars
1250
1000
800

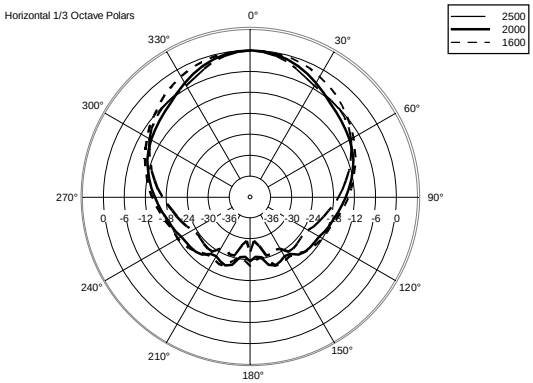
Horizontal 1/3 Octave Polars
2500
2000
1600

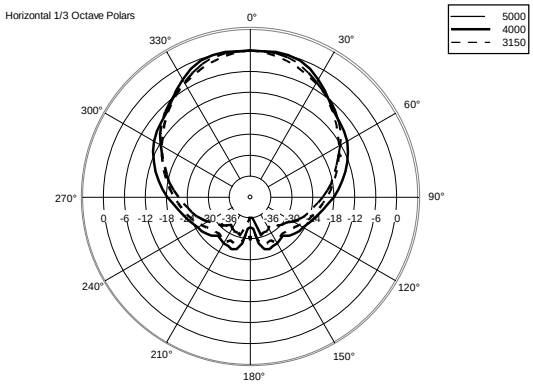
Horizontal 1/3 Octave Polars
5000
4000
3150

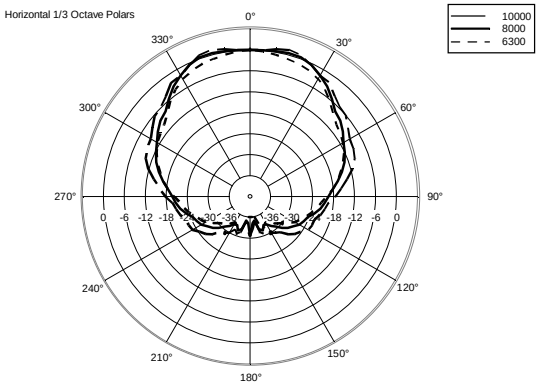
Horizontal 1/3 Octave Polars
10000
8000
6300

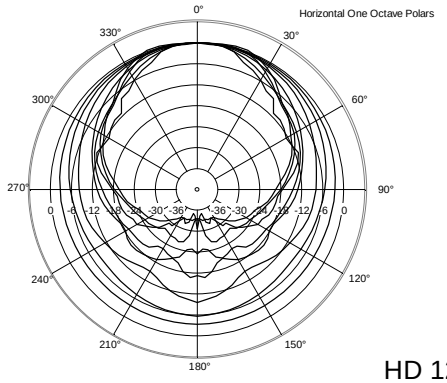
Horizontal One Octave Polars

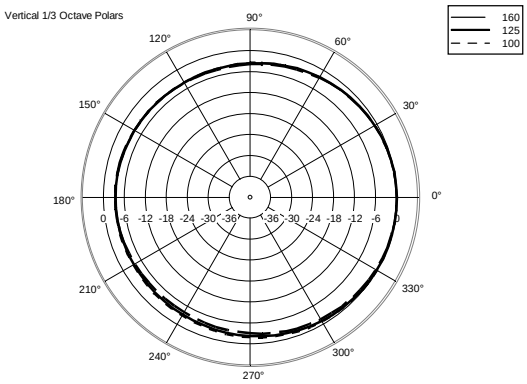
Vertical 1/3 Octave Polars
160
125
100

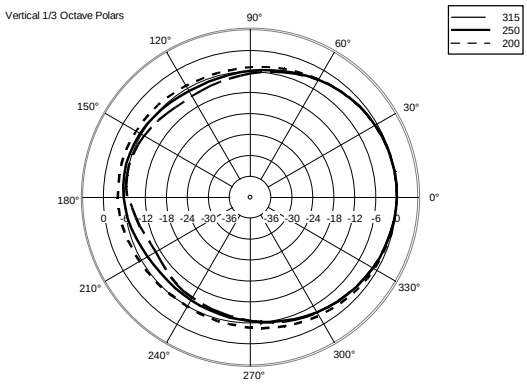
Vertical 1/3 Octave Polars
315
250
200

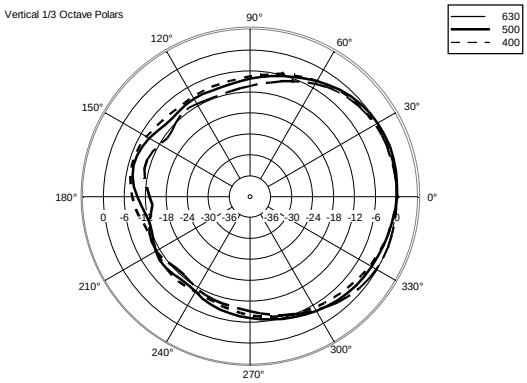
Vertical 1/3 Octave Polars
630
500
400

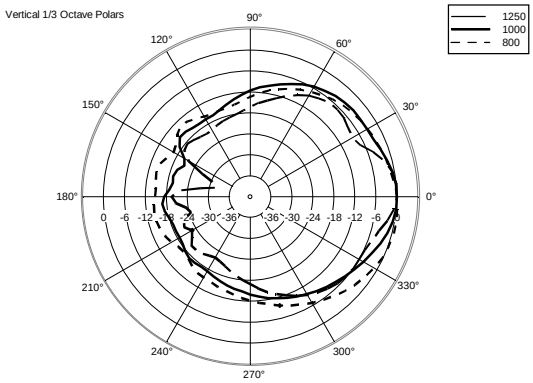
Vertical 1/3 Octave Polars
1250
1000
800

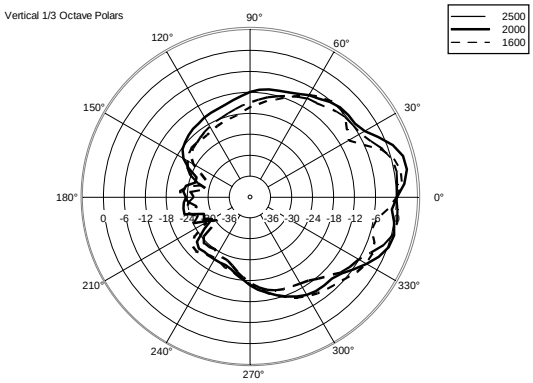
Vertical 1/3 Octave Polars
2500
2000
1600

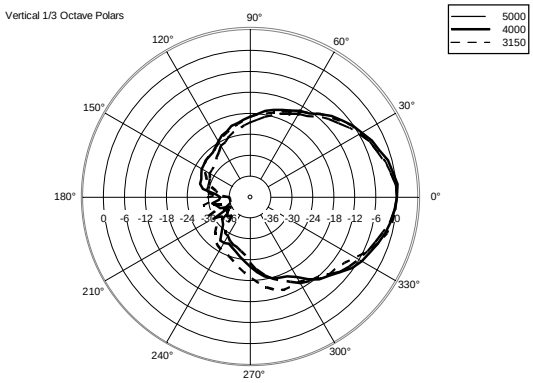
Vertical 1/3 Octave Polars
5000
4000
3150

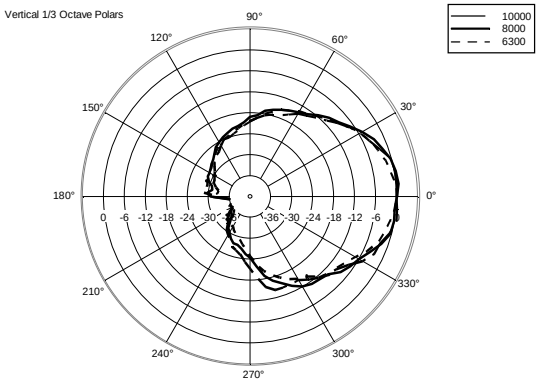
Vertical 1/3 Octave Polars
10000
8000
6300

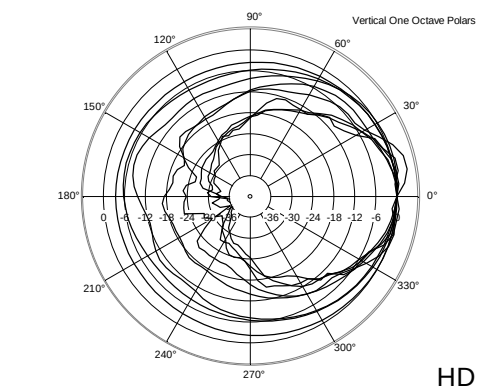
Vertical One Octave Polars

ACCESSORIES

AC PM-M20

PART NUMBER **13360067**
EAN: 8024530014599

AC PMX POLE MOUNT M20

PART NUMBER **13360232**
EAN: 8024530010058

AC PRO-FS PROFESS. LOCKING FLOOR STAND

PART NUMBER **13360109**
EAN: 8024530006471

AC PRO-PM PROFESS. LOCKING POLE MOUNT

PART NUMBER **13360110**
EAN: 8024530006488

COVER CVR HD 12-32

PART NUMBER **13360209**
EAN: 8024530010720

HORIZONTAL BRACKET H-BR 2X HD 12-32

PART NUMBER **13360216**
EAN: 8024530011741