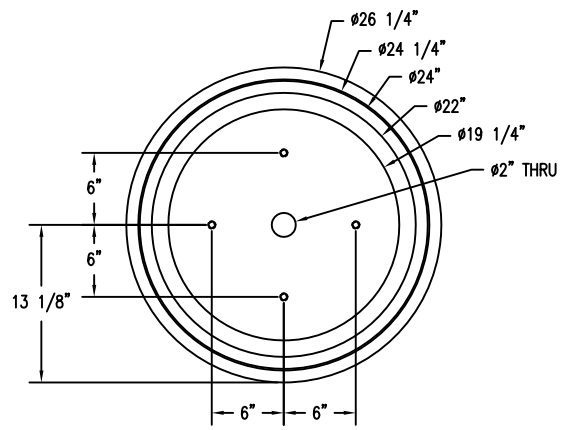

1 TOP VIEW
Scale: 1 1/2" = 1'-0"

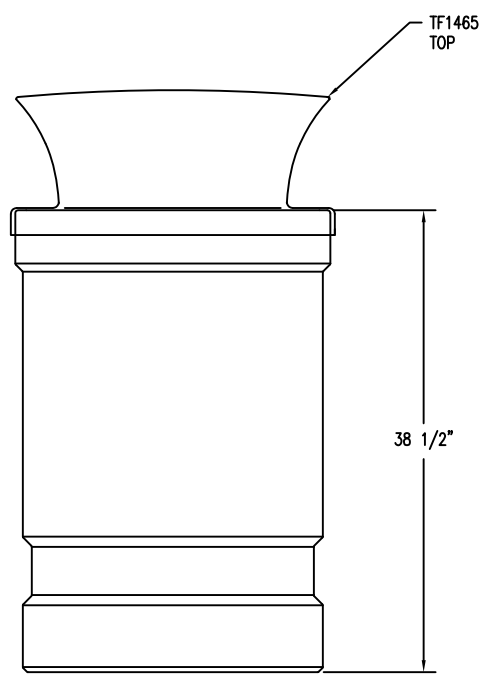

2 ELEVATION
Scale: 1 1/2" = 1'-0"

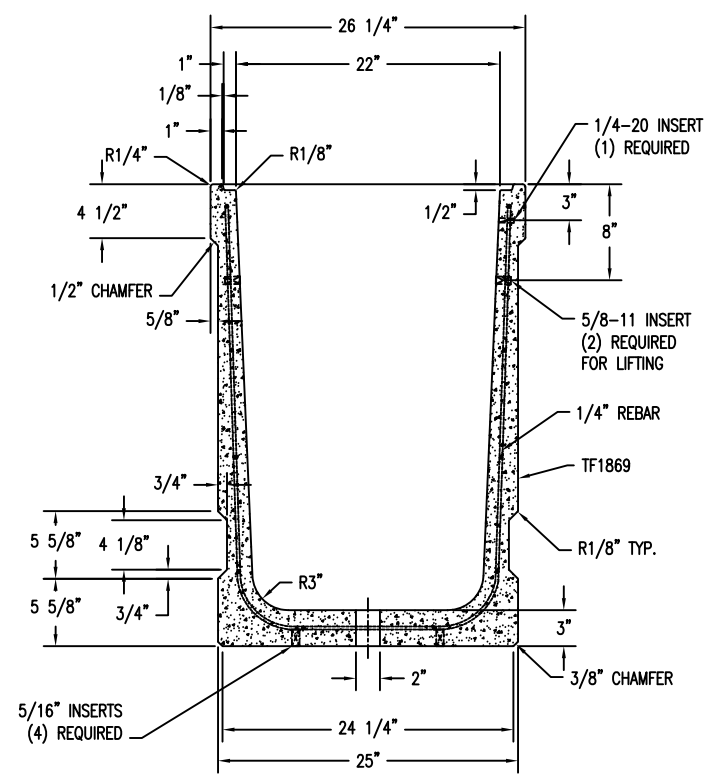

3 SECTION
Scale: 1 1/2" = 1'-0"

WAUSAU TILE SITE FURNISHINGS

P.O. BOX 1520 WAUSAU, WISCONSIN 54402-1520 800/388-8728
E-MAIL: WTILE@WAUSAUTILE.COM
WEB SITE: WWW.WAUSAUTILE.COM

REVISIONS						DRAWN BY JPZ	JOB	MATERIAL CONCRETE
NO.	DATE	BY	NO.	DATE	BY	JOB NO.	LOCATION	WEIGHT 565 LBS
1			4			SCALE AS NOTED	UNLESS OTHERWISE SPECIFIED DIMENSIONS ARE IN INCHES TOLERANCES: ± 1/8"	DATE 11/11/11 / ITEM NO. TF1130
2			5					
3			6			CHECKED		FINISH OPTIONS / DWG. NO. 1 OF 1