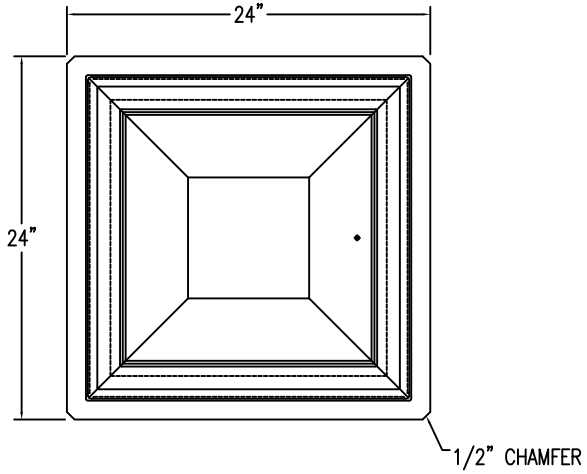

1 TOP VIEW

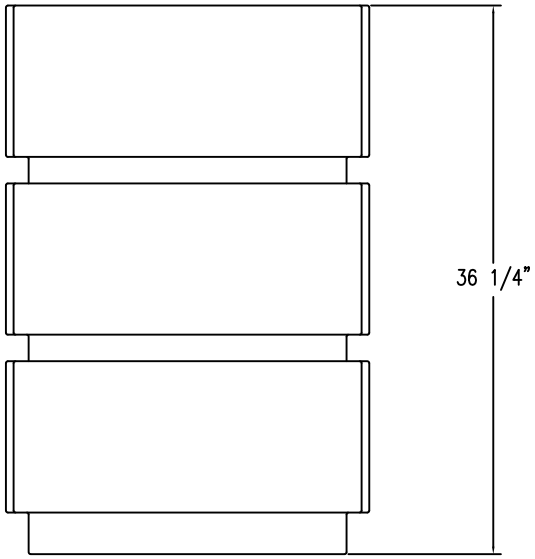

2 FRONT VIEW

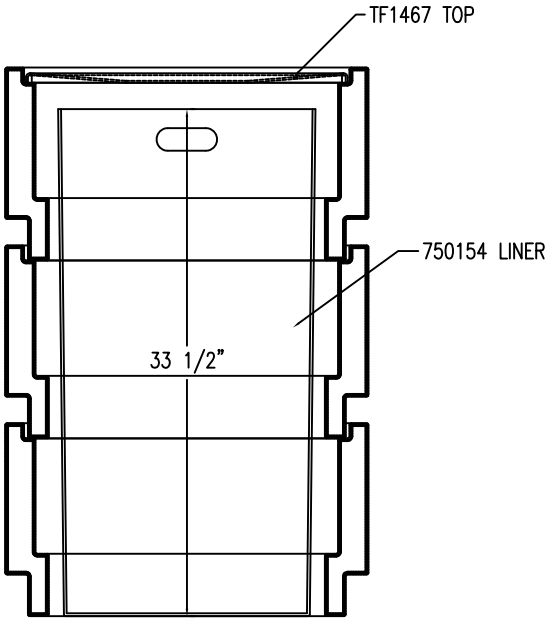

3 SECTION VIEW

WAUSAU TILE SITE FURNISHINGS

P.O. BOX 1520 WAUSAU, WISCONSIN 54402-1520 800/388-6720
E-MAIL: WTE@WAUSAUTILE.COM
WEB SITE: WWW.WAUSAUTILE.COM

REVISIONS								
NO.	DATE	BY	NO.	DATE	BY	DRAWN BY MJS	JOB	MATERIAL PLASTIC
1			4			TITLE	JOB NO.	WEIGHT 70 LBS.
2			5			SCALE	UNLESS OTHERWISE SPECIFIED DIMENSIONS ARE IN INCHES ANGLES ±0.5° FRACTIONS ± 1/4 2 PL ±0.01 3 PL ±0.005	DATE	FINISH OPTIONS
3			6					DWG. NO. TF1071