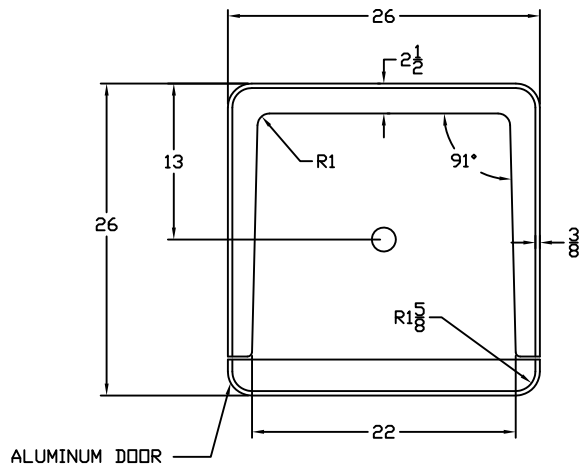

TOP VIEW

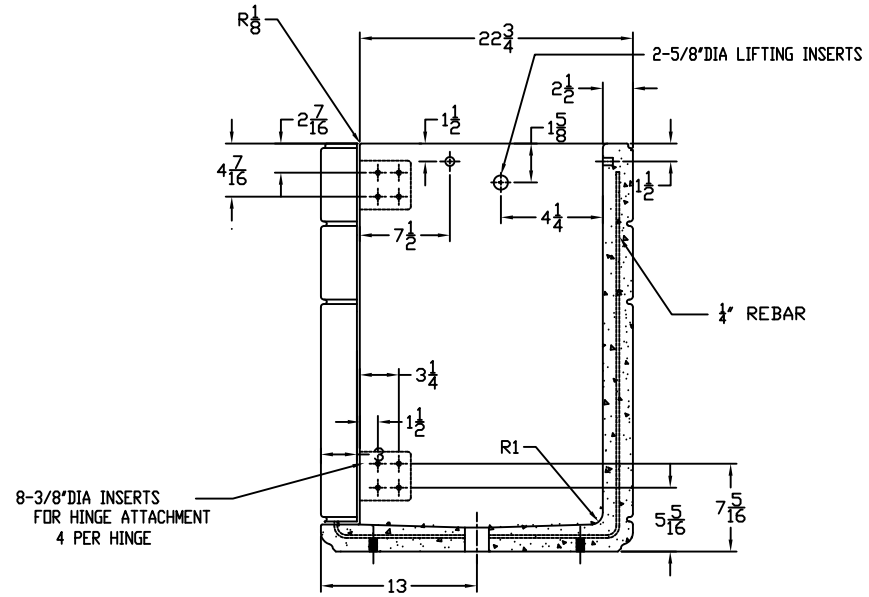

FRONT SECTION VIEW

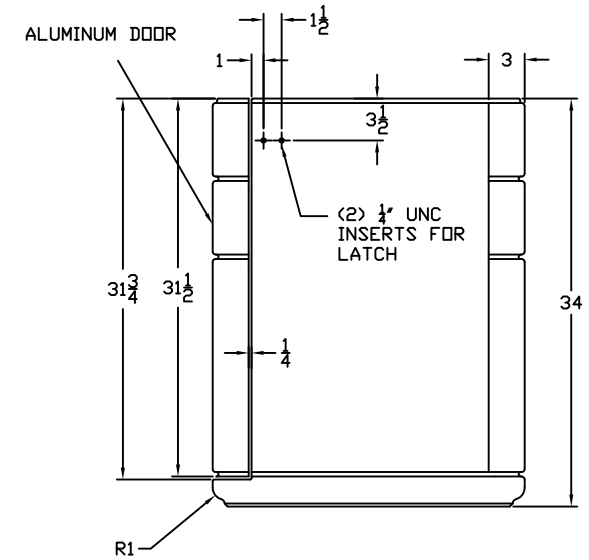

FRONT VIEW

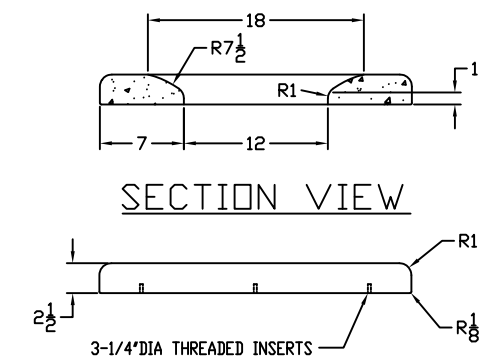

SECTION VIEW

SIDE VIEW

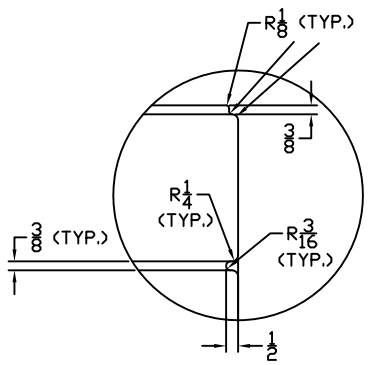

DETAIL "A"

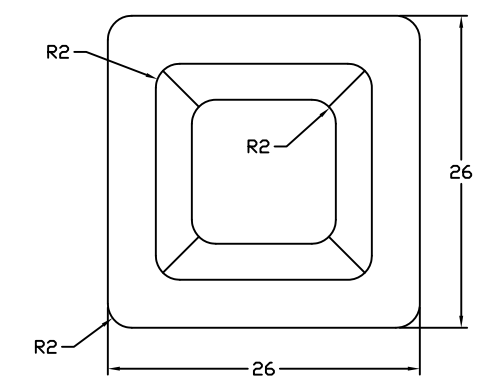

TOP VIEW

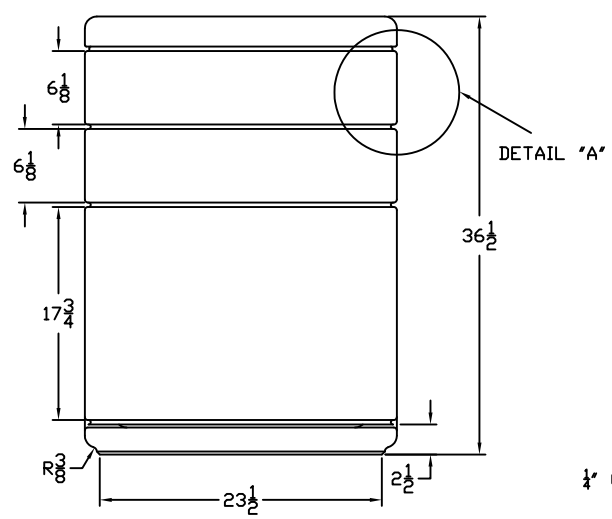

LEFT SIDE VIEW

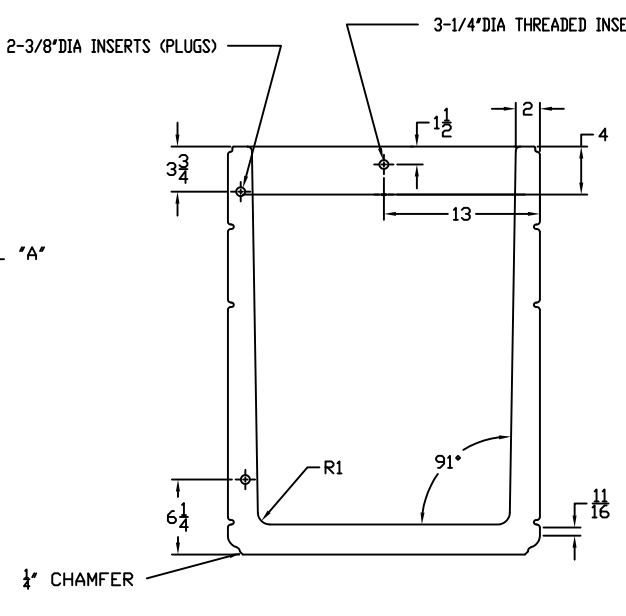

LEFT SIDE VIEW
WITHOUT DOOR

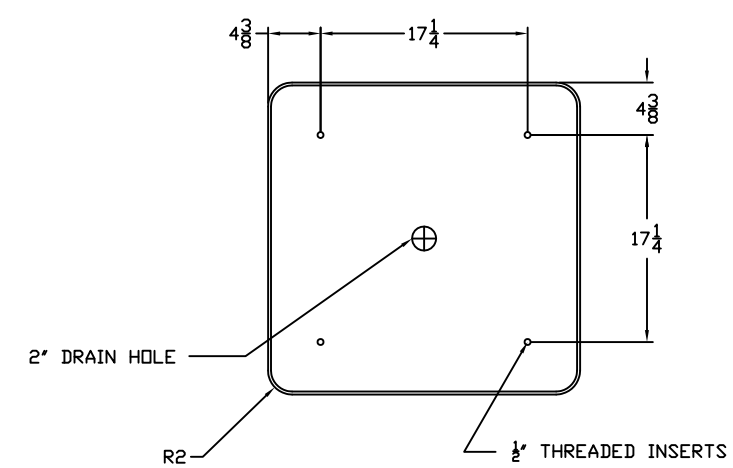

BOTTOM VIEW

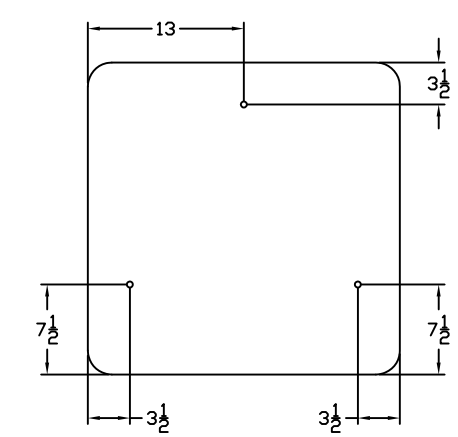

BOTTOM VIEW

WAUSAU TILE SITE FURNISHINGS

P.O. BOX 1520 WAUSAU, WISCONSIN 54402-1520 800/388-8728
P.O. BOX 967 BANNING, CALIFORNIA 92220 800/231-4636

REVISIONS									
NO.	DATE	BY	NO.	DATE	BY	DRAWN BY LBE	JOB		MATERIAL
1			4			TITLE	JOB NO.		WEIGHT 655 LBS
2			5			SCALE	UNLESS OTHERWISE SPECIFIED DIMENSIONS ARE IN INCHES ANGLES ±0.5° 2 PL ±0.01 3 PL ±0.005	DATE 4-10-08	FINISH OPTIONS
3			6			CHECKED CHECK			DWG. NO. TF1045