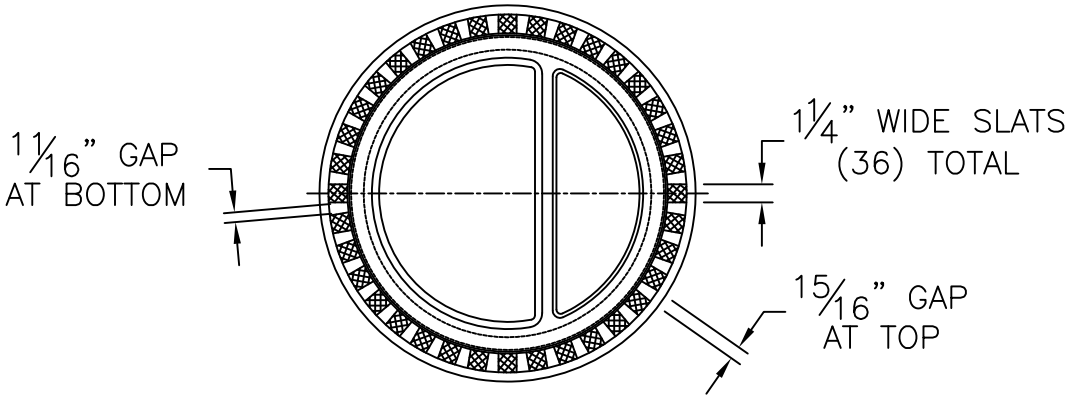

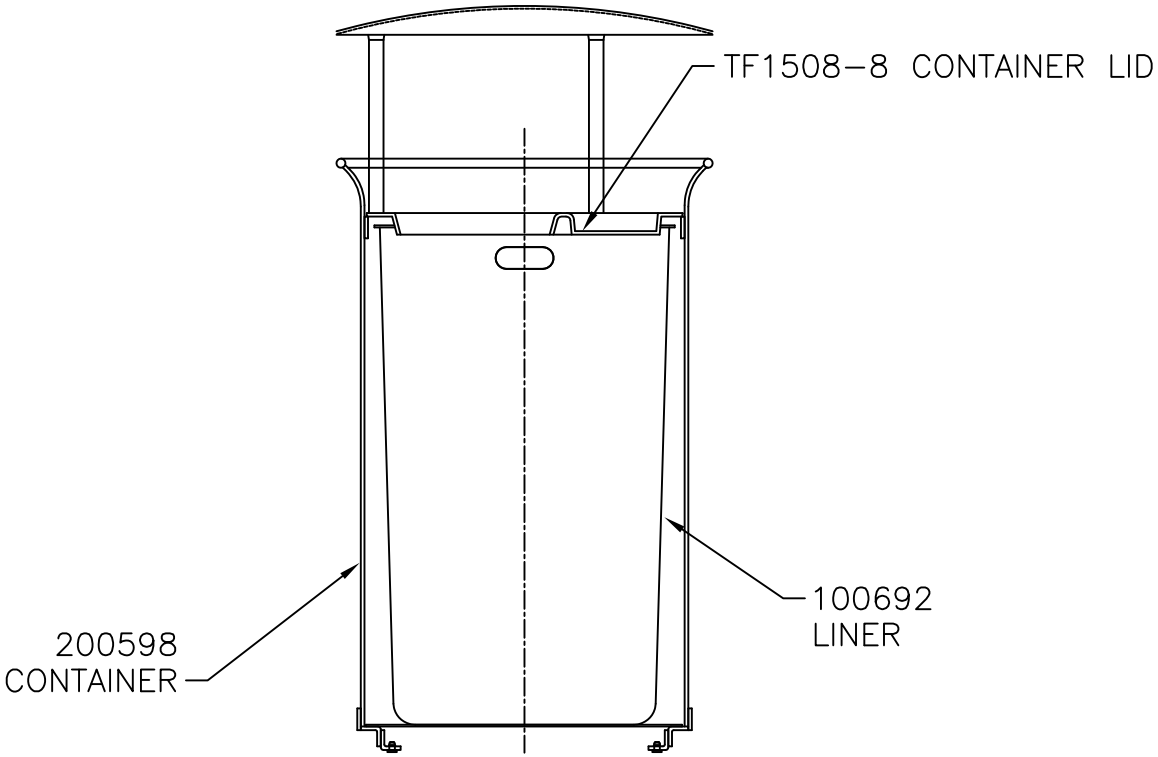

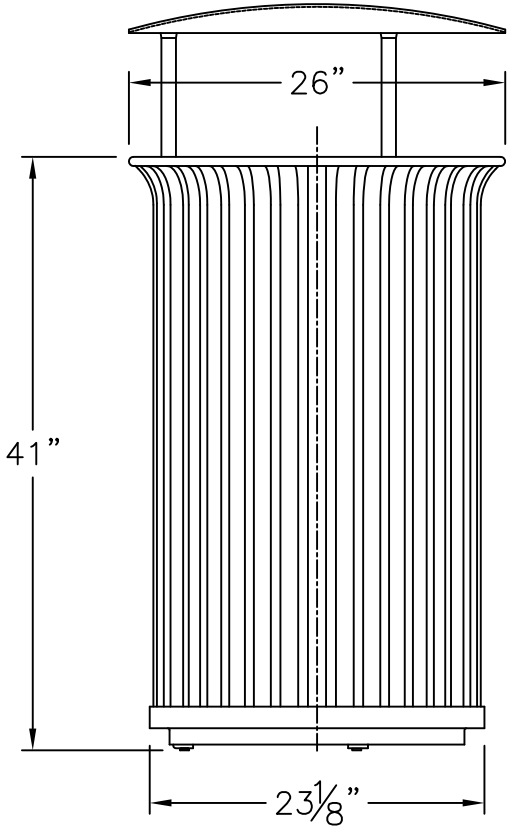

WAUSAU TILE SITE FURNISHINGS						P.O. BOX 1520 WAUSAU, WISCONSIN 54402-1520 800/388-6728 P.O. BOX 967 SANGER, CALIFORNIA 93220 800/231-1839		
REVISIONS						DRAWN BY L.BE	JOB	MATERIAL
NO.	DATE	BY	NO.	DATE	BY	TITLE	JOB NO.	WEIGHT
1			4			SCALE	UNLESS OTHERWISE SPECIFIED DIMENSIONS ARE IN INCHES ANGLES ±0.5° 2 PL ±0.01 3 PL ±0.005	DATE 9-4-08 FINISH OPTIONS
2			5			CHECKED		DWG. NO. TF3206
3			6					