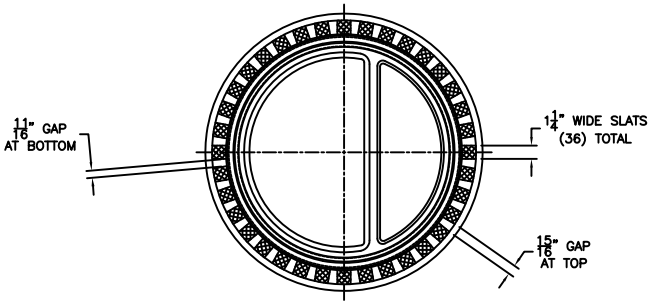

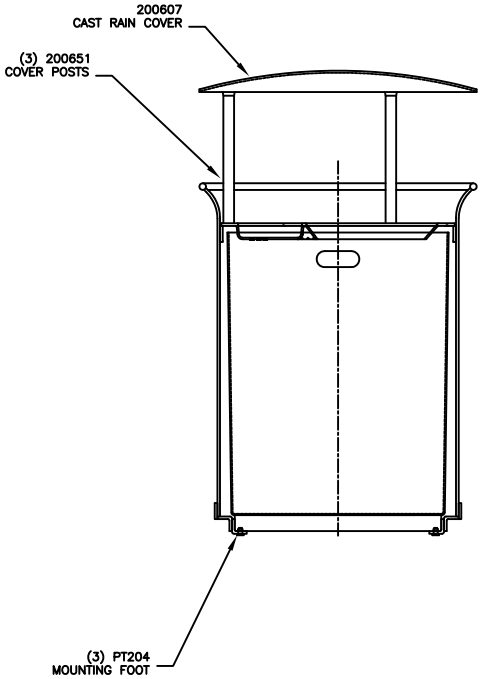

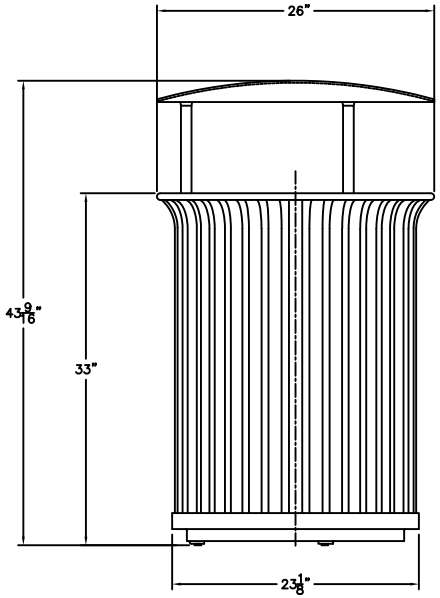

WAUSAU TILE SITE FURNISHINGS						P.O. BOX 1520 WAUSAU, WISCONSIN 54402-1520 800/388-6720 P.O. BOX 967 BANNING, CALIFORNIA 92220 800/231-6535				
REVISIONS						DRAWN BY LBE	JOB		MATERIAL STEEL	
NO.	DATE	BY	NO.	DATE	BY	TITLE	JOB NO.		WEIGHT 185 LBS	
1			4			SCALE	UNLESS OTHERWISE SPECIFIED DIMENSIONS ARE IN INCHES ANGLES ±0.5° 2 PL ±0.01 3 PL ±0.005	DATE 6-05-08	FINISH OPTIONS	
2			5							
3			6			CHECKED			DWG. NO. TFMF3205	