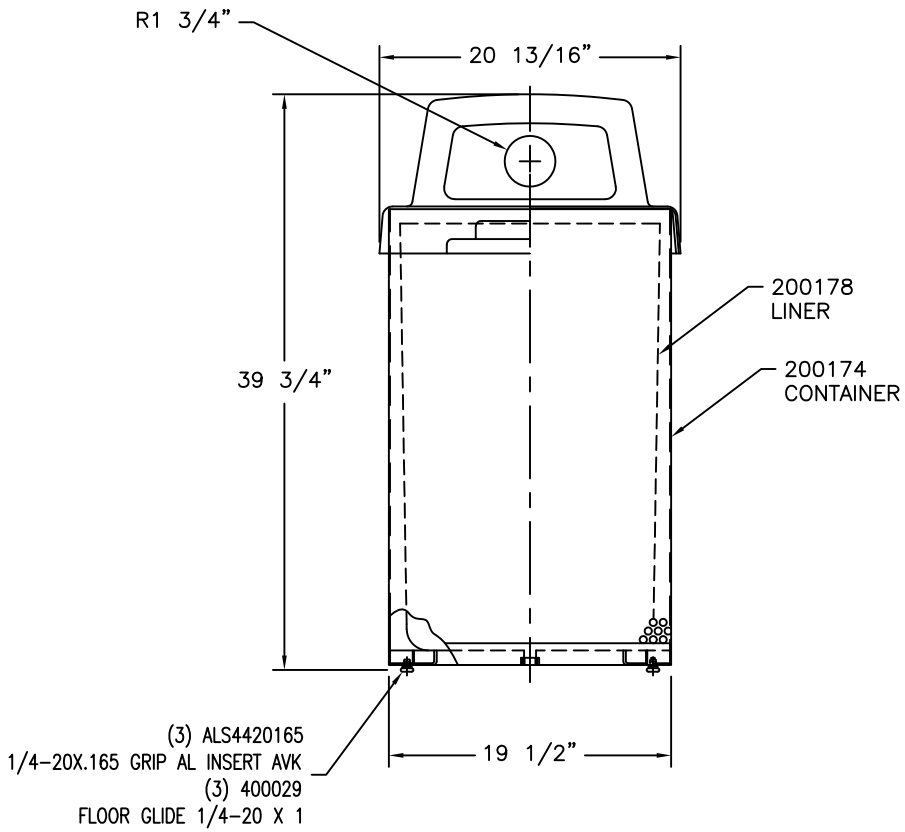


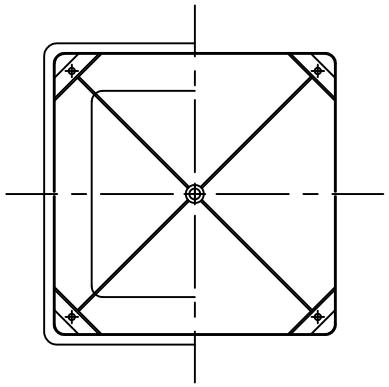

TOP VIEW

**WAUSAU TILE SITE FURNISHINGS**

P.O. BOX 1520 WAUSAU, WISCONSIN 54402-1520 800/388-6728
P.O. BOX 967 SANGER, CALIFORNIA 93220 800/231-4839

| REVISIONS | | | | | | DRAWN BY L.BE | JOB | MATERIAL |
|---|---|---|---|---|---|---|---|---|
| NO. | DATE | BY | NO. | DATE | BY | TITLE | JOB NO. | WEIGHT |
| 1 | | | 4 | | | SCALE | UNLESS OTHERWISE SPECIFIED DIMENSIONS ARE IN INCHES ANGLES ±0.5° 2 PL ±0.01 3 PL ±0.005 | DATE 9-4-08 FINISH OPTIONS |
| 2 | | | 5 | | | | | |
| 3 | | | 6 | | | CHECKED | | DWG. NO. MF3057 |