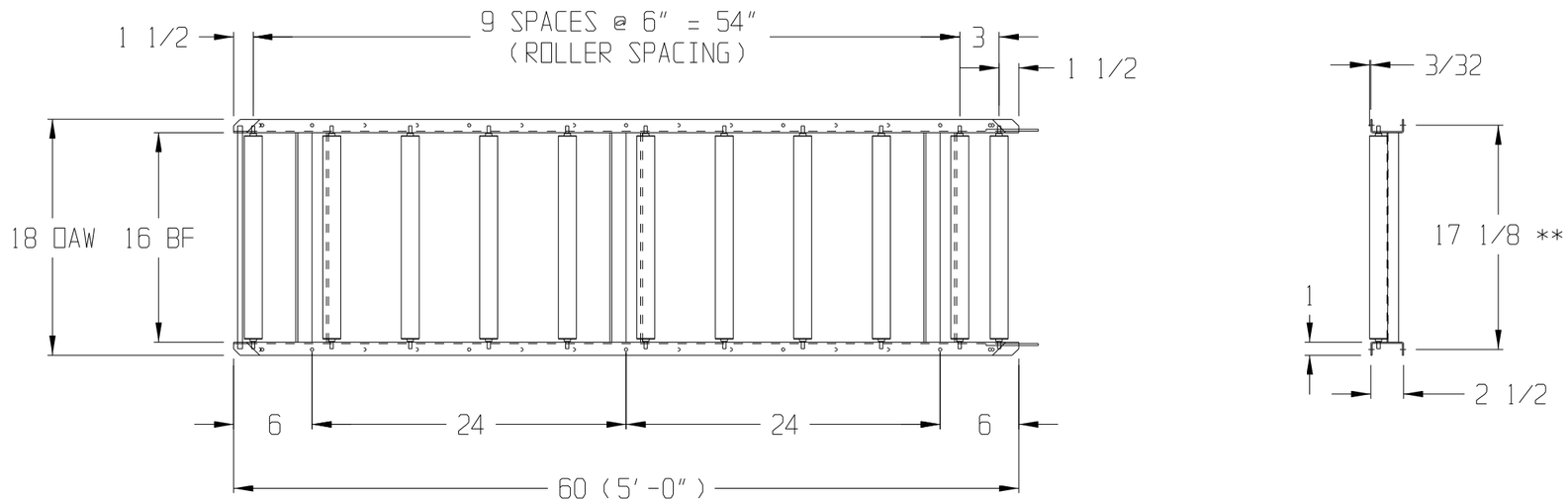

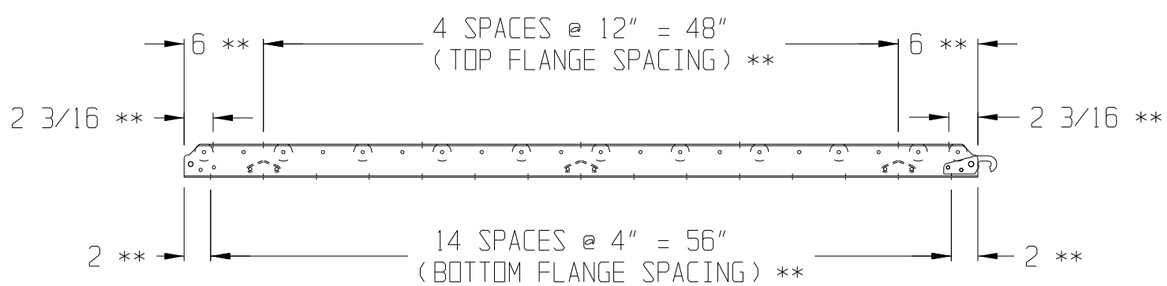

OPTIONAL CONNECTOR STYLES

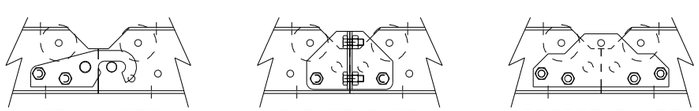

HOOK & ROD SUPPLY STD. | END COUPLER | BRIDGE PLATE

NOTES:
- 1-3/8" x 18 GA. GALV. ROLLERS
- 1/4" DIA. AXLES
- OILED BEARINGS
- FLANGE HOLES PUNCHED 17/64" DIA.
- 2-1/2" x 1" x 12 GA. GALV. FORMED SIDEFRAME
- ** DENOTES FLANGE HOLE DIMENSION

OmniMetalcraft corp.
ALPENA, MI U.S.A.
(989) 358-7000

TITLE RSHS1.4-18-6-5		
DRAWN BY	JOB	DRAWING NO.
DATE	DRAWING SIZE B	
SCALE 1"=1'-0		