Project: _____ Date: _____ Approval: _____ Qty: ____ Item #: 6CS21717X

Regency Tables & Sinks

REGENCY
Tables and Sinks

# Regency 41" Two Compartment Commercial Sink with Stainless Steel Legs and Cross Bracing

#6CS21717X







## Technical Data

| | |
|---|---|
| **Length** | 41 Inches |
| **Width** | 22 1/2 Inches |
| **Height** | 43 3/4 Inches |
| **Bowl Depth** | 12 Inches |
| **Backsplash Height** | 9 3/4 Inches |
| **Work Surface Height** | 34 Inches |
| **Basket Drain Size** | 3 1/2 Inches |
| **Bowl Front to Back** | 17 Inches |
| **Bowl Left to Right** | 17 Inches |
| **Drain Outlet Size** | 1 1/2 Inches |

## Features

- Durable, corrosion-resistant 16-gauge type 304 stainless steel
- (2) 17" x 17" x 12" sink bowls with rounded corners for easy cleaning
- Stainless steel legs include cross bracing and adjustable feet for stability
- 3 1/2" drain basket strainers help prevent clogs
- Backsplash and rolled edges prevent splashes and overflow

## Certifications

**Certified by NSF**

© 2026 Regency Tables & Sinks

## Technical Data

| | |
|---|---|
| **Faucet Centers** | 8 Inches |
| **Features** | Adjustable Feet<br>NSF Certified |
| **Gauge** | 16 Gauge |
| **Included** | Basket Strainer |
| **Leg Construction** | Stainless Steel |
| **Material** | Stainless Steel |
| **Number of Compartments** | 2 Compartments |
| **Stainless Steel Type** | Type 304 |
| **Style** | 0 Drainboards |
| **Type** | Straight / Line Sinks |

## Plan View

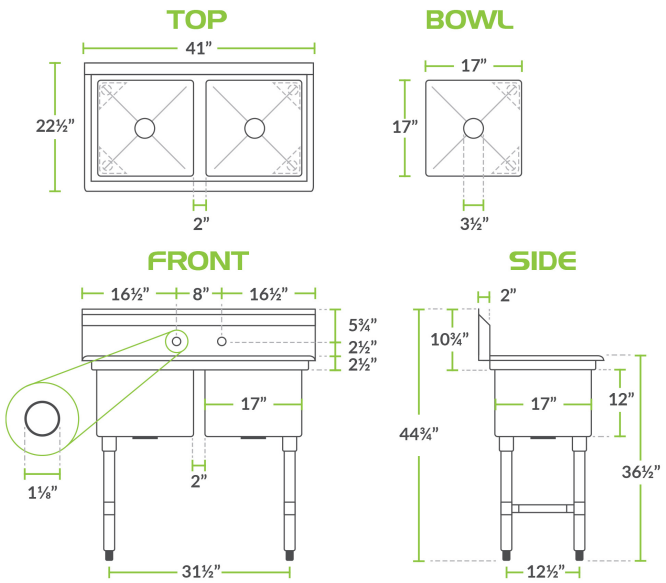


## Notes & Details

Outfit your facility with this reliable Regency 2-compartment commercial sink. This sink is constructed from high-quality 16-gauge type 304 stainless steel with a welded construction for long-lasting durability and corrosion resistance. The (2) 17" x 17" x 12" sink bowls are die-stamped to a minimum of 1/4" to ensure proper drainage. Each bowl includes a 3 1/2" basket strainer to catch food debris and prevent clogs. For easy cleaning, the compartments have rounded corners so you can rinse and wipe down the sink.

The included 9 3/4" tall backsplash has (2) 1 1/8" diameter holes punched on 8" centers, allowing you to add a faucet (sold separately). This sink includes a 2 1/2" raised rolled edge that is 2" tall on the front and both sides to contain splashes and overflow. It also comes equipped with 1 1/2" IPS drain connections. The 1 5/8" diameter stainless steel legs have stainless steel sockets, cross bracing, and adjustable bullet feet for added stability. Designed for medium-duty use, this sink is a great addition to any commercial kitchen.

⚠ **WARNING:** This product can expose you to chemicals including Lead and Nickel (Metallic), which are known to the State of California to cause cancer and birth defects or other reproductive harm. For more information, go to www.p65warnings.ca.gov.

© 2026 Regency Tables & Sinks