Project: _____ Date: _____ Approval: _____ Qty: ____ Item #: 6CS123232X

Regency Tables & Sinks

REGENCY
Tables and Sinks

Regency 71" 1-Compartment Commercial Sink with Stainless Steel Legs, Cross Bracing, and (2) 24" Drainboards

#6CS123232X







Technical Data

Length	71 Inches
Width	28 Inches
Height	43 3/4 Inches
Drainboard Length	24 Inches
Bowl Depth	12 Inches
Backsplash Height	9 3/4 Inches
Work Surface Height	34 Inches
Basket Drain Size	3 1/2 Inches
Bowl Front to Back	23 Inches
Bowl Left to Right	23 Inches

Features

- Durable, corrosion-resistant 16-gauge type 304 stainless steel
- 23" x 23" x 12" sink bowl with rounded corners for easy cleaning
- Stainless steel legs include cross bracing and adjustable feet for stability
- Includes (2) 24" drainboards and a 3 1/2" drain basket strainer
- Backsplash and rolled edges prevent splashes and overflow

Certifications

Certified by NSF

© 2026 Regency Tables & Sinks

Regency Tables & Sinks

Technical Data

Drain Outlet Size	1 1/2 Inches
Drainboard Location	Left Drainboard Right Drainboard
Faucet Centers	8 Inches
Features	Adjustable Feet NSF Certified
Gauge	16 Gauge
Included	Basket Strainer
Leg Construction	Stainless Steel
Material	Stainless Steel
Number of Compartments	1 Compartment
Stainless Steel Type	Type 304
Style	2 Drainboards
Type	Straight / Line Sinks

Plan View

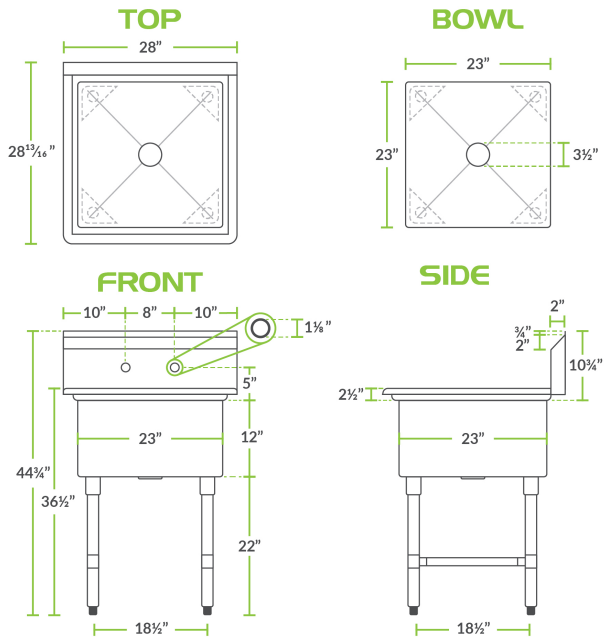

Notes & Details

Outfit your facility with this reliable Regency 1-compartment commercial sink. This sink is constructed from high-quality 16-gauge type 304 stainless steel with a welded construction for long-lasting durability and corrosion resistance. It features (2) 24" sturdy drainboards so you can easily wash and dry dishes and utensils in one convenient location. The 23" x 23" x 12" sink bowl is die-stamped to a minimum of 1/4" to ensure proper drainage. Plus, it includes a 3 1/2" basket strainer to catch food debris and prevent clogs. For easy cleaning, the compartment has rounded corners so you can rinse and wipe down the sink.

The included 9 3/4" tall backsplash has (2) 1 1/8" diameter holes punched on 8" centers, allowing you to add a faucet (sold separately). This sink includes a 2 1/2" raised rolled edge that is 2" tall on the front and both sides to contain splashes and overflow. It also comes equipped with a 1 1/2" IPS drain connection. The 1 5/8" diameter stainless steel legs have stainless steel sockets, cross bracing, and adjustable bullet feet for added stability. Designed for medium-duty use, this sink is a great addition to any commercial kitchen.

© 2026 Regency Tables & Sinks

⚠ **WARNING:** This product can expose you to chemicals including Lead and Nickel (Metallic), which are known to the State of California to cause cancer and birth defects or other reproductive harm. For more information, go to www.p65warnings.ca.gov.

© 2026 Regency Tables & Sinks