FACTORY WIRING
FIELD WIRING
* REQUIRED FOR OUTDOOR MODELS
THIS WIRING DIAGRAM IS APPLICABLE TO UNADA FAN MOTOR USE ONLY

POWER LEADS FROM DISCONNECT SWITCH 208-230/60/1

CONNECT INCOMING POWER LEADS FROM DISCONNECT SWITCH TO L1 AND L2 CONSISTENT WITH NAMEPLATE VOLTAGE AND FREQUENCY. USE COPPER CONDUCTORS ONLY.

(D)PFE100BT3
(D)PFE150BT3
(D)PFE200BT3
(D)PCE050BT3
(D)PCE075BT3
(D)PCE100BT3

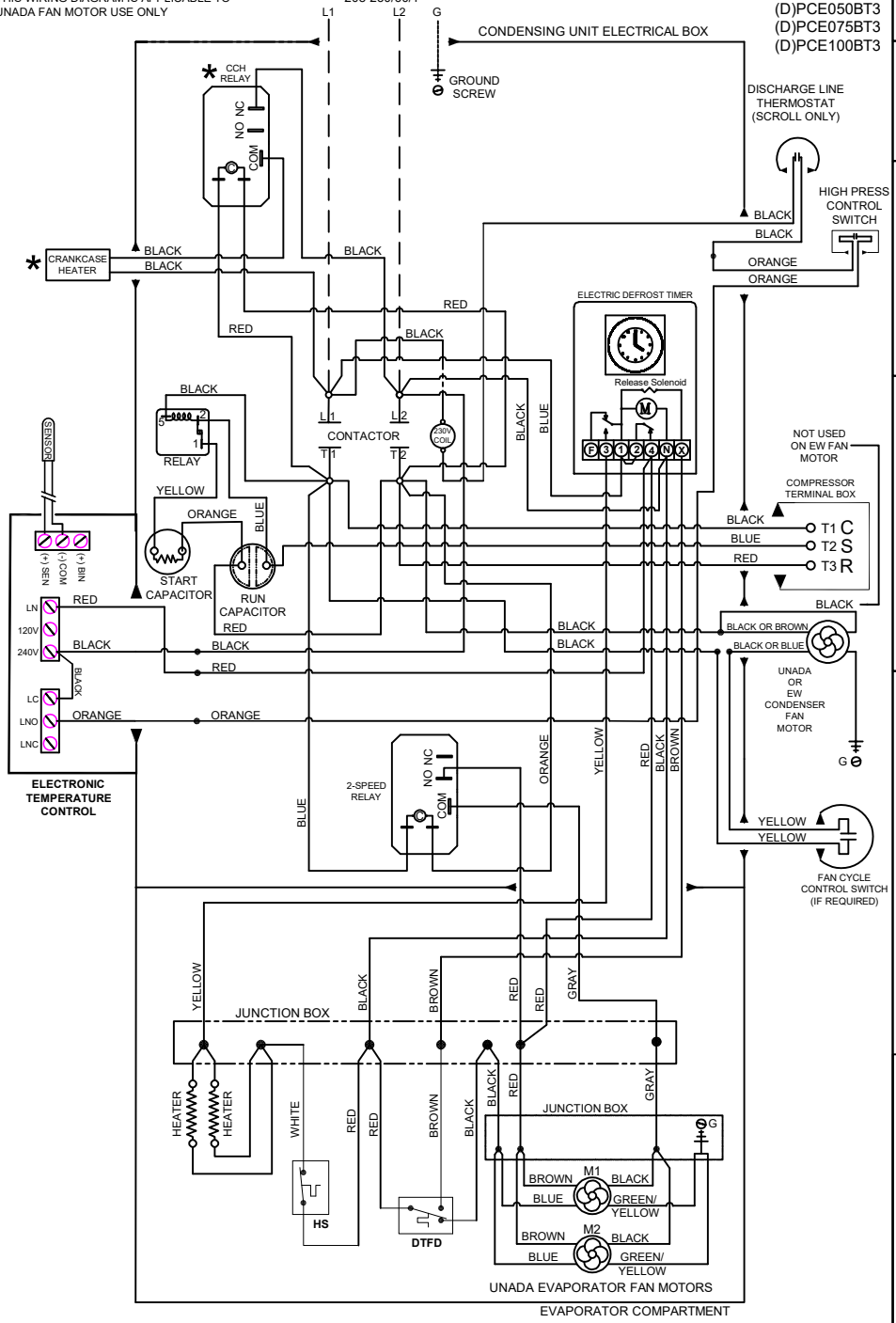


R454C POLAR PAK ELECTRIC DEFROST WIRING DIAGRAM 208-230/1/60

PN 550008561-0
09-10-2024 BKS

*NOTE:*
*SYSTEM IS SUPPLIED WITH A HOT GAS CONDENSATE PAN. A CONDENSATE DRAIN LINE IS NOT REQUIRED.*

*NOTE:*
*18" CLEARANCE REQUIRED ON ALL SIDES FOR PROPER OPERATION OF POLAR PAK SYSTEMS.*

ITEMS PROVIDED INCLUDE:

1. Liquid Line Filter/Driers
2. Electronic Temp Control (Installed)
3. Expansion Valve (Installed)
4. Scroll Compressor-Copeland
5. High Pressure Switch
6. EC Fan Motors-2 Speed (Evap)

CONFORMS TO ANSI/UL STD 427
CERTIFIED TO CAN/CSA STD C22.2 NO.120-04
Intertek 40807

THIS DRAWING/FILE IS THE PROPERTY OF KOLPAK AND IS STORED IN AN ELECTRONIC DATA BASE. ANY ALTERATIONS OR ADDITIONS MUST BE APPROVED BY KOLPAK ENGINEERING AND CHANGED IN DATA BASE.

SIGNED APPROVED PRINT MUST BE REC'D. B/4 FAB.
☐ APPROVED AS DRAWN
☐ APPROVED AS NOTED
☐ REVISE AND RESUBMIT
SIGNED _____
DATE _____


KOLPAK
A Welbilt Brand
2915 Tennessee Avenue North, Parsons, TN 38363
(731) 847-6361*(800) 826-7036*


## REFRIGERATING UNIT – FREEZER

| | | | | | |
|---|---|---|---|---|---|
| MODEL | PFE100BT3 | | | 1 | HP |
| VOLTS | 208-230 | PH 1 | CYCLES | 60 | |
| REFRIGERANT | R454C | 26 OZ. | | 3,740 | BTUH |
| TOTAL LOAD | 9.9 | AMPS | TOTAL HEAT REJECTED | 7,843 | BTUH |
| MIN.CIRCUIT AMPACITY | 12.1 | | EVAP. FAN | 0.6 | AMPS EA. |
| MAX.EXTERNAL FUSE SIZE | 15 | | EVAP. FAN | 1/20 | HP |
| COMP. RLA | 8.7 | | DEFROST | 4.3 | AMPS |
| COMP. LRA | 55.0 | | COND. FAN | 0.6 | AMPS |
| LOW SIDE DESIGN PRESS. | 230 | PSIG | COND. FAN | 1/20 | HP |
| HIGH SIDE DESIGN PRESS. | 475 | | WEIGHT | 300 | LBS. |
| AWEF | | | | | |

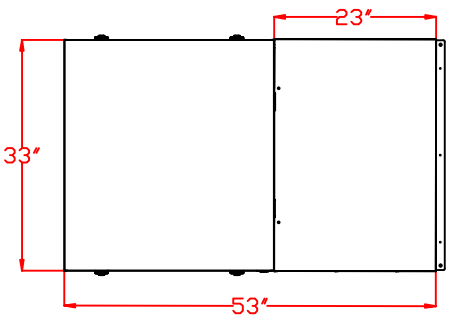


TOP VIEW

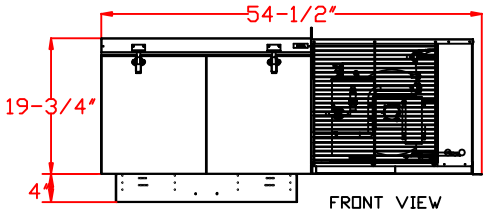


FRONT VIEW

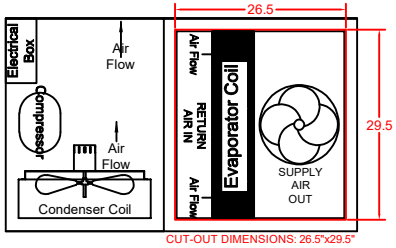


CUT-OUT DIMENSIONS: 26.5"x29.5"

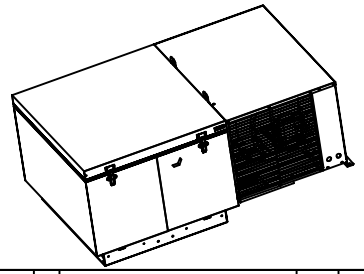

| DATE | No. | DESCRIPTION OF CHANGE | AUTH | BY |
|---|---|---|---|---|
| | | | | |

PFE100BT3 (208-230/1/60)

SCALE: NONE
DATE: 12/20/2024
DEALER:
DRAWN BY: SCG
REVISED
KOLPAK QUOTE NO:
DRAWING NUMBER: PFE100BT3

KOLPAK A Welbilt Brand