OP 180/35

OP Series

G9F08126

Technical Data

		Tolerance
Bottom (A)	170 mm	± 1 mm
Top (B)	181 mm	± 1 mm
Inner rim (C)	186 mm	± 1 mm
Outter rim (D)	194 mm	± 1 mm
Height (H)	35 mm	± 1 mm
Mold weight	12.2 g	± 5 %
Basis weight	217 g/m²	± 5 %
Heat resistance	390° F max	

Characteristics

Paper board stock	Pure bleached paper board printed on both sides in PMS color 469 U Brown. Ink is resistant to heat and alcohol up to the recommended maximum baking temp of 390 degrees F. Inner surface of mold is laminated with PET, 7 microns in thickness.
FDA	Baking mold is manufactured in compliance with 21 CFR 176.170 and 176.180.
Kosher	Certified by KOF-K Supervision of Teaneck, New Jersey.
Country of origin	Italy

Additional specification documents available upon request.

Packaging and Storage

Case	24 in x 16 in x 16.5 in
Cube	3.667 ft³
Case weight	Gross 20.9 lbs. Net 19.3 lbs.
Pieces/case	720 pcs. (180 pcs. * 4 rows)
Pallet	25 boxes at 85" high
Tie/high	5 boxes per 5 levels
Pieces/pallet	18,000
Box Label	Item code, description, quantity, production number, production date, and operator.
Storage	Dry conditions. Three year shelf life.
GTIN-14	18051768028149

(01)18051768028149(10)123456(15)991231(422)380(91)000720

Prepared	Approved	Date	Revision	Modifications
C Bruseghini Quality Manager C. Bruseghini		9/26/2017	6	Revision 6: General modifications.

1-510-215-8999 • Fax 1-510-215-9175 • www.novacartusa.com • info@novacartusa.com

OP 180/35

OP Series

G9F08126

Technical Data

		Tolerance
Bottom (A)	170 mm	± 1 mm
Top (B)	181 mm	± 1 mm
Inner rim (C)	186 mm	± 1 mm
Outter rim (D)	194 mm	± 1 mm
Height (H)	35 mm	± 1 mm
Mold weight	12.2 g	± 5 %
Basis weight	217 g/m²	± 5 %
Heat resistance	390° F max	

Technical Drawing

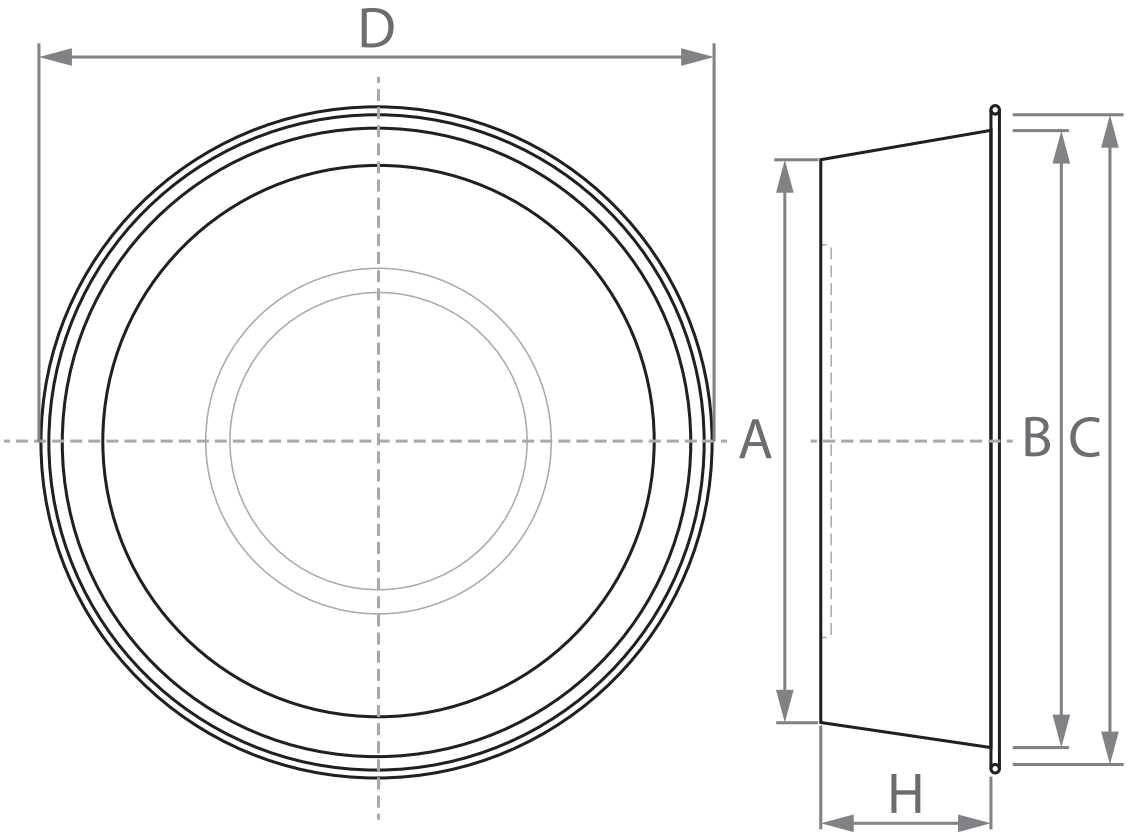

Prepared	Approved	Date	Revision	Modifications
C Bruseghini Quality Manager C. Bruseghini		9/26/2017	6	Revision 6: General modifications.

1-510-215-8999 • Fax 1-510-215-9175 • www.novacartusa.com • info@novacartusa.com