Lancaster Table & Seating Harbor Black Outdoor Arm Chair

#427CSMARMBLK

Item #: 427CSMARMBLK Qty: _____

Project: _____

Approval: _____ Date: _____

Features

- **Integrated armrests and rounded back to support comfort**
- **Simple seating solution for patios and outdoor dining areas**
- **Durable, powder coated steel construction**
- **Stackable with other Lancaster Table & Seating Harbor chairs for easy, space-saving storage**
- **Ample 300 lb. weight capacity**

Certifications

Stackable Fully Assembled

Technical Data

Width	17 Inches
Depth	23 Inches
Height	34 Inches
Height Style	Standard Height
Seat Height	17 1/2 Inches
Arms	With Arms
Assembled	Fully Assembled
Back	With Back
Back Color	Black
Capacity	300 lb.

© 2024 Lancaster Table & Seating

Technical Data	
Features	Stackable
Finish	Powder-Coated
Frame Color	Black
Frame Material	Metal Steel
Padded Seat	Without Padded Seat
Seat Color	Black
Seat Material	Metal Steel
Seat Type	Mesh
Style	Arm Chair
Type	Chairs
Usage	Indoor Outdoor

Plan View

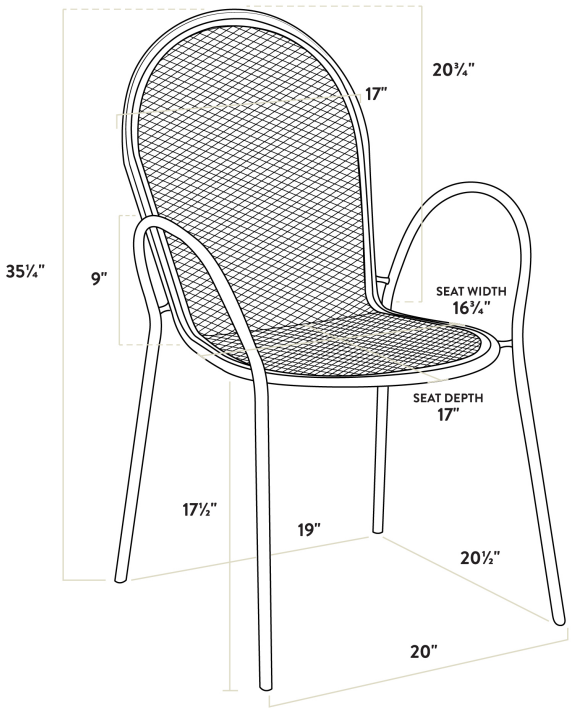

© 2024 Lancaster Table & Seating

Notes & Details

Designed with durability and comfort in mind, this Lancaster Table & Seating Harbor black outdoor arm chair is the perfect addition to your deck or patio dining area. This black chair features a sturdy, powder coated steel construction that's built for long-lasting use. The powder coated frame offers rust resistance that will hold up in the elements, making it ideal for outdoor use. While the mesh seat and full back provide superior comfort, the integrated, ergonomic armrests provide stability and make it easy for guests to sit down and stand up. Plus, the mesh material ensures that water won't pool on the seat, helping it to dry faster after washing, accidental spills, or bad weather. Pair this chair with a black Lancaster & Seating steel table (sold separately) for a complete dining set, or place it with a side table for a convenient seating option near your fire pit or outdoor bar.

This arm chair's simplistic style and rounded shape add a distinct visual appeal to any patio space, craft brew house, urban restaurant, upscale pub, or bistro dining area. Plus, the lightweight design allows you to easily move the chair wherever it's needed most! Its plastic glides protect floors from scuff marks and slide smoothly, helping to keep loud, unwanted noise to a minimum. With its stackable design, you can stack up to 6 chairs for easy, space-saving storage. To keep this chair looking clean, simply wipe it down with a damp cloth and your preferred mild soap. Boasting an ample 300 lb. weight capacity, this strong, stylish chair provides guests with a way to comfortably enjoy your signature drinks, appetizers, entrees, and desserts! To save you time and hassle, this chair ships fully assembled!

⚠ **WARNING:** This product can expose you to chemicals including lead, which are known to the State of California to cause cancer and birth defects or other reproductive harm. For more information, go to www.p65warnings.ca.gov.

© 2024 Lancaster Table & Seating