Lancaster Table & Seating Alloy Distressed Copper Outdoor Cafe Chair

#164CMCAFECPD

Item #: 164CMCAFECPD Qty: _____

Project: _____

Approval: _____ Date: _____

Features

- Rust-resistant steel construction with distressed copper powder coat
- Ample 400 lb. weight capacity
- Reinforced frame with under-seat cross bracing enhances strength and stability
- Designed for use indoors and outdoors
- Stackable with other Lancaster Table & Seating Alloy cafe chairs for space-saving storage

Certifications

Fully Assembled Stackable

Technical Data

Width	17 1/2 Inches
Depth	17 1/2 Inches
Height	33 1/8 Inches
Seat Width	14 Inches
Seat Depth	14 Inches
Back Height	17 Inches
Height Style	Standard Height
Seat Height	17 3/4 Inches
Arms	Without Arms
Assembly Options	Fully Assembled

© 2025 Lancaster Table & Seating

Technical Data	
Back	With Back
Back Color	Black
Back Material	Metal
Capacity	400 lb.
Features	Corrosion-Resistant Distressed Powder Coated Stackable
Finish	Distressed Powder-Coated
Frame Color	Copper
Frame Material	Metal Steel
Padded Seat	Without Padded Seat
Product Line	Lancaster Table & Seating Alloy
Seat Color	Black
Seat Material	Metal Steel
Seat Type	Drain Hole
Style	Cafe and Side Chair
Type	Chairs
Usage	Indoor Outdoor

Plan View

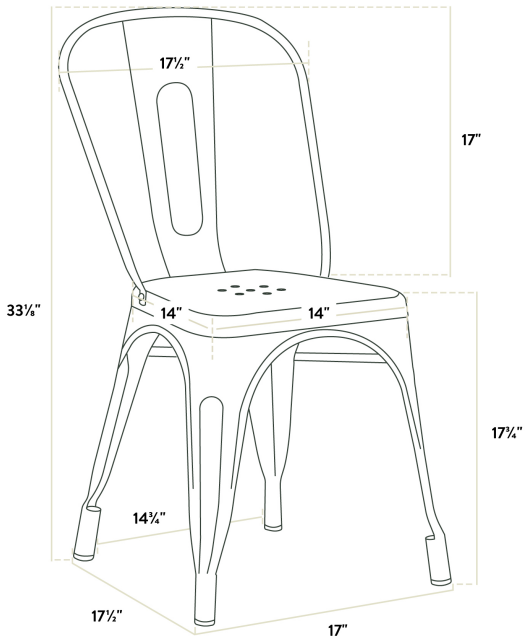

© 2025 Lancaster Table & Seating

Notes & Details

Take your modern restaurant, cafe, or bistro to the next level with this Lancaster Table & Seating Alloy distressed copper outdoor cafe chair! This chair is made of durable steel and coated to withstand years of use. The distressed copper color adds a sleek, modern touch to any setting and is sure to be a contemporary design choice that guests love. Comfortable and stylish, this strong yet lightweight chair is an excellent choice for your indoor or outdoor dining area. To save time and hassle, this chair ships fully assembled.

Ready to withstand daily outdoor use, this chair is constructed of durable steel. It's then powder coated for rust and corrosion resistance as well as extra protection against everyday wear and tear. The frame is reinforced with additional under-seat cross bracing to provide strength and stability without adding extra bulk or weight to this sleek design.

This industrial chair boasts a 400 lb. weight capacity. To ensure that your customers are free to enjoy your signature drinks, appetizers, entrees, and desserts, it features a supportive back and comfortable seat with rounded corners for a sleek, minimalist look. In addition to being stylish and durable, this lightweight chair is also easy to move and transport so you can quickly reconfigure your dining space and easily clean up at the end of the night. It can be used indoors during the off-season then transferred outdoors as the weather gets nicer!

This chair can even be stacked with up to six other Lancaster Table & Seating Alloy outdoor cafe chairs to maximize storage space! With a wide variety of color options to choose from, you'll be able to mix and match to create a vibrant seating arrangement in your establishment. This low-maintenance chair features protective glides that help keep floor surfaces in pristine condition. Plus, the drain holes ensure that water won't pool on the seat, helping it to dry faster after washing or accidental spills.

⚠ **WARNING:** This product can expose you to chemicals including lead, which are known to the State of California to cause cancer and birth defects or other reproductive harm. For more information, go to www.p65warnings.ca.gov.

© 2025 Lancaster Table & Seating