Lancaster Table & Seating Industrial Chair with Slate Gray Finish

#164CINDGRYAN

Item #: 164CINDGRYAN Qty: _____

Project: _____

Approval: _____ Date: _____

Features

- **Industrial style adds rustic charm to any establishment**
- **Seat, back, and legs are made of solid wood with a slate gray finish**
- **Durable steel frame ensures a stable foundation**
- **Ships fully assembled for immediate use**
- **Plastic glides protect floors from scratches and scuffs**

Certifications

Fully Assembled

Technical Data

Width	17 Inches
Depth	17 Inches
Height	32 Inches
Back Width	15 Inches
Seat Width	15 3/16 Inches
Seat Depth	15 3/16 Inches
Back Height	6 1/4 Inches
Height Style	Standard Height
Seat Height	17 3/4 Inches
Arms	Without Arms

© 2024 Lancaster Table & Seating

Technical Data	
Assembled	Fully Assembled
Back	With Back
Back Color	Gray
Back Material	Beechwood Wood
Capacity	350 lb.
Finish	Slate Gray
Frame Color	Gray
Frame Material	Metal Steel Wood
Padded Seat	Without Padded Seat
Seat Color	Gray
Seat Material	Wood
Seat Type	Solid
Style	Industrial
Type	Chairs
Usage	Indoor

Plan View

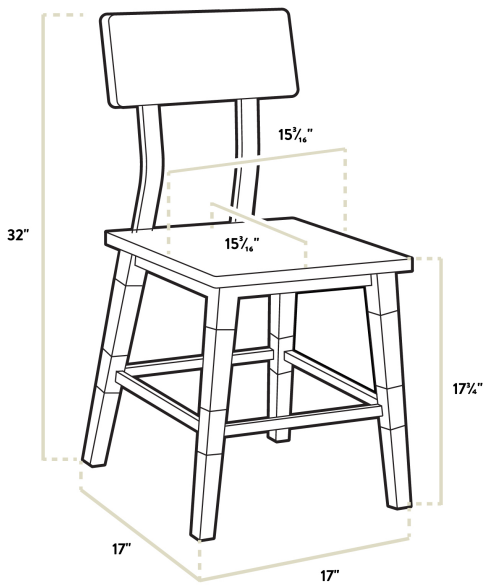

© 2024 Lancaster Table & Seating

Notes & Details

Rural countryside meets urban city with this Lancaster Table & Seating industrial chair with slate gray finish! This chair's distressed finish and weathered texture combine with its sleek, square seat to add a rustic element with contemporary flair to your establishment. It features the natural look of wood with rugged metal accents for added visual appeal. Stylish and durable, this chair is a versatile option for any brewery, winery, or restaurant.

This chair's sturdy steel frame provides unmatched durability in your dining room. It can hold up to 350 lb. of weight thanks to the metal frame and supports under the seat. The seat, back, and legs are made of solid beechwood, which stands up better to daily use and is able to better resist gouging and chipping compared to other types of wood. Plus, the slate gray finish offers the ultimate in style and is sure to complement the atmosphere of your establishment. This chair also features a rectangular back that's contoured to provide extra support to your customers' upper backs.

Foot rungs below the seat give customers a place to rest their legs. Each leg comes with an integrated glide to protect your floors from scuffing. To save you the time and hassle of assembly, this chair is shipped fully assembled with the seat already attached. Pair this chair with other Lancaster Table & Seating industrial chairs, bar stools, or tables (sold separately) to complete your dining space!

⚠ **WARNING:** This product can expose you to chemicals including lead, which are known to the State of California to cause cancer and birth defects or other reproductive harm. For more information, go to www.p65warnings.ca.gov.

© 2024 Lancaster Table & Seating