Lancaster Table & Seating Alloy Series 32" x 32" Onyx Black Bar Height Outdoor Table

#164BA3232BLK

Item #: 164BA3232BLK Qty: _____

Project: _____

Approval: _____ Date: _____

Features

- Designed for use indoors and outdoors
- Onyx-black powder coat for rust and corrosion resistance
- 32" x 32" square shape and bar height fits a variety of settings
- Durable steel construction is perfect for long-term use
- Easy to assemble and lightweight enough to move around for special events

Certifications

Seating Capacity: 4

Technical Data

Length	31 1/2 Inches
Width	31 1/2 Inches
Height	42 Inches
Height Style	Bar Height
Assembled	Assembly Required
Base Material	Steel
Color	Black
Features	Powder Coated
Installation Type	Freestanding
Shape	Square

© 2024 Lancaster Table & Seating

Technical Data	
Table Seating Capacity	4 Chairs
Tabletop Material	Steel
Type	Tables
Usage	Indoor Outdoor

Plan View

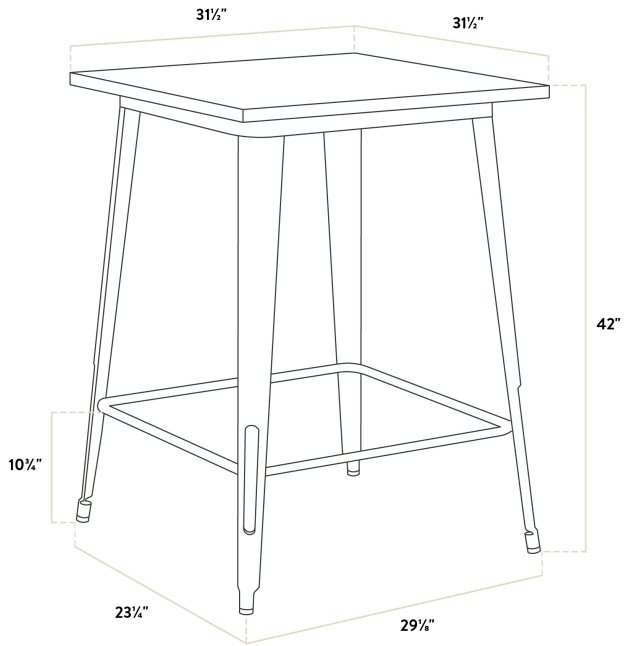

Notes & Details

Take your modern restaurant, cafe, or bistro to the next level with this Lancaster Table & Seating Alloy Series 32" x 32" onyx-black bar-height outdoor table! This table is made of durable steel and coated to withstand years of use. The onyx-black color adds a sleek, modern touch to any setting and is sure to be a contemporary design choice that guests love. Comfortable and stylish, this strong yet lightweight bar-height table is an excellent choice for your indoor or outdoor dining area. To save you money on shipping costs, this table ships unassembled. All required assembly hardware is included so you can quickly set it up in its proper space and let your guests enjoy!

Ready to withstand daily outdoor use, this table is constructed of durable steel. It's then powder coated for rust and corrosion resistance as well as extra protection against everyday wear and tear. The sturdy base is reinforced with additional cross bracing to provide strength and stability without adding extra bulk or weight to this sleek design.

In addition to being stylish and durable, this lightweight table is also easy to move and transport so you can quickly reconfigure your dining space and easily clean up at the end of the night. It can be used indoors during the off-season then transferred outdoors as the weather gets nicer! Plus, cleaning is as easy as wiping the surface with a damp cloth and all-purpose cleaner.

Its 32" x 32" square surface is perfect for comfortably seating two to four guests while saving space on your patio. With a wide variety of color options to choose from, you'll be able to mix and match to create a vibrant seating arrangement in your establishment. This low-maintenance table features protective glides that help keep floor surfaces in pristine condition.

⚠ **WARNING:** This product can expose you to chemicals including lead, which are known to the State of California to cause cancer and birth defects or other reproductive harm. For more information, go to www.p65warnings.ca.gov.

© 2024 Lancaster Table & Seating