Project _____

Item # _____

Quantity _____

Decorative Carving Stations

Models: DCS400-1, -1CM
DCSB2-R24-1, -2420-1, -3624-2

An eye-catching solution for carving and serving, the Hatco Decorative Carving Station features a stylish Decorative Lamp and is available in multiple configurations, including post mount, counter mount, and freestanding models with an integrated heated simulated stone base. Designed to deliver both visual appeal and reliable performance, these stations are ideal for chef-served presentations in restaurants, hotels, country clubs, casinos, and catered events.

Standard features

- Available as freestanding (DCSB2 models) with a round or rectangular heated simulated stone base, post mount (DCS400-1 models), or counter mount (DCS400-1CM models)
- Patented telescoping heated lamp(s) with a 30° shade pivot adjust to accommodate food products, putting the heat and light where it is needed most
- The height of the heat lamp(s) is adjustable, measured from the bottom of the lampshade to the countertop (DCS400 models) or cutting board (DCSB2 models):
  - DCSB2 models: 14" to 26" (356 to 600 mm)
  - DCS400 models: 16" to 28" (406 to 711 mm)
- Clear coated, 250 watt bulb(s) included
- Models with simulated stone finishes are Swanstone®

DCSB2-R24-1, -2420-1, -3624-2:

- Include a thermostatically controlled heated base
- Sneeze guard is 5" (127 mm) above the heated base for easy accessibility and is removable for easy cleaning
- Heated bases and cutting boards are made of foodsafe materials
- Cutting board matches colors of heated base

DCS400-1:

- Includes a black base for stability and to minimize the risk of tipping

DCS400-1CM:

- Designed to be mounted to a countertop with a simulated stone trim ring

DCS400-1CM with optional Plated finish Antique Bronze post & shade and optional Ice simulated stone trim ring

DCS400-1 with standard Plated finish Bright Nickel post & shade and standard black powdercoated post base.

DCSB2-R24-1 with standard Plated finish Bright Nickel post & shade and standard Ash Gray simulated stone heated base

DCSB2-2420-1 with optional Plated finish Antique Brass post & shade and standard Ash Gray simulated stone heated base

DCSB2-3624-2 with optional Plated finish Bright Copper post & shade and optional Birch simulated stone heated base

Options (available at time of purchase only)

Plated Finishes – For Post and Decorative Lamp Shade – Non-standard colors are non-returnable:

☐ Bright Brass ☐ Bright Nickel (standard) ☐ Bright Copper
☐ Antique Brass ☐ Antique Bronze

Simulated Stone Finishes – Swanstone – For Trim Ring (DCS400-1 and DCS400-1CM models), and Heated Base & Cutting Board (DCSB2 models only) – Non-standard colors are non-returnable:

☐ Ash Gray (standard) ☐ Birch ☐ Ice

Accessories

Coated Bulbs, Luminaire models only: ☐120V, 40W Clear ☐240V, 40W Clear

Coated Bulbs:
☐120V, 250W Clear ☐240V, 250W Clear ☐120V, 250W Red

Uncoated Bulbs:
☐120V, 250W Clear ☐240V, 250W Clear ☐120V, 250W Red

For colors and finishes, please refer to the Color Chip Chart.

For operation, location and safety information, please refer to the Installation and Operating Manual.

ANSI/NSF 4

MADE IN THE USA

HATCO CORPORATION | P.O. Box 340500 Milwaukee, WI 53234-0500 U.S.A. | (414) 671-6350

www.hatcocorp.com | customerservice@hatcocorp.com | Find a Hatco Rep | Image Library | Document Library

Decorative Carving Stations

Models: DCS400-1, DCS400-1CM, DCSB2-R24-1, DCSB2-2420-1, DCSB2-3624-2

DCS400-1

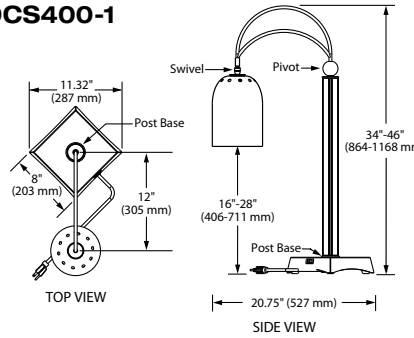

DCSB2-R24-1

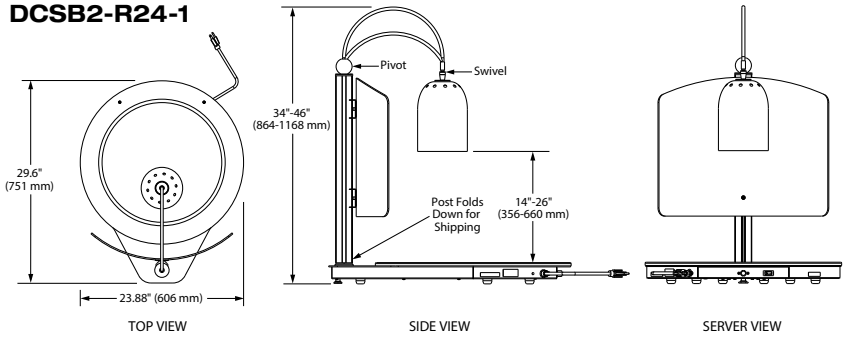

DCS400-1CM

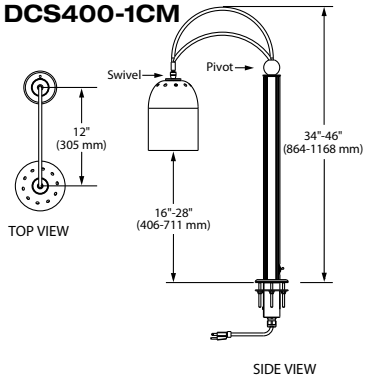

DCSB2-R2420-1

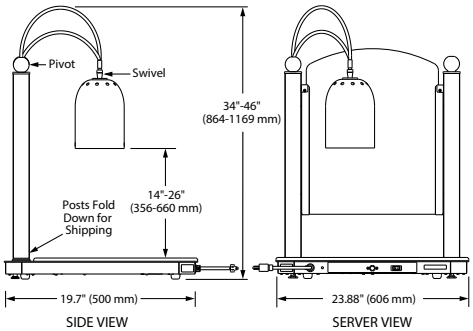

DCSB2-3624-2

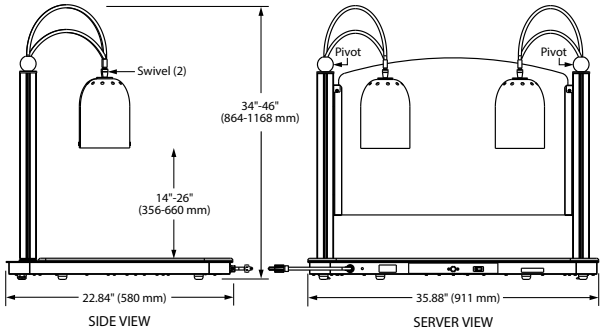

SPECIFICATIONS
Decorative Carving Stations – All Single Phase

The shaded areas contain electrical information for International models only

Model	Dimensions (W x D x H)	Heated Base Surface (W x D)	Voltage	Watts	Amps	Plug	Cord Location	Approx. Ship Weight
DCS400-1	8" x 20.75" x 34"-46" (203 x 527 x 864-1168 mm)	———	120	250	2.1	NEMA 5-15P	Server side center, base of unit	32 lbs. (15 kg)
			220 (CE)	210	1.0	CEE 7/7 Schuko, AS3112, BS-1363		
			230 (CE)	230				
			240 (CE)	250	1.1			
DCS400-1CM	6.125" x 20.75" x 34"-46" (156 x 527 x 864-1168 mm)	———	120	250	2.1	NEMA 5-15P	Bottom of unit	18 lbs. (9 kg)
			220 (CE)	210	1.0	CEE 7/7 Schuko, AS3112, BS-1363		
			230 (CE)	230				
			240 (CE)	250	1.1			
DCSB2-R24-1	26"W x 27.06"D x 34"-46"H (660 x 687 x 864-1168 mm)	Diameter: 24" (609 mm)	120	600	5.0	NEMA 5-15P	Server side on left, base of unit	75 lbs. (34 kg)
			220 (CE)	530	2.4	CEE 7/7 Schuko, AS3112, BS-1363		
			230 (CE)	580	2.5			
			240 (CE)	631	2.6			
DCSB2-2420-1	23.88" x 23.95" x 34"-46" (606 x 608 x 864-1168 mm)	24" x 20" (609 x 508 mm)	120	750	6.3	NEMA 5-15P	Server side on left, base of unit	82 lbs. (38 kg)
			220 (CE)	667	3.0	CEE 7/7 Schuko, AS3112, BS-1363		
			230 (CE)	730	3.2			
			240 (CE)	794	3.3			
DCSB2-3624-2	35.88" x 24" x 34"-46" (911 x 610 x 864-1168 mm)	36" x 24" (914 x 609 mm)	120	1300	10.8	NEMA 5-15P	Server side on left, base of unit	128 lbs. (60 kg)
			220 (CE)	1152	5.2	CEE 7/7 Schuko, AS3112, BS-1363		
			230 (CE)	1259	5.5			
			240 (CE)	1371	5.7			

PLUG CONFIGURATIONS

NEMA 5-15P

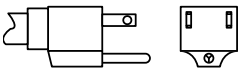

CEE 7/7 Schuko

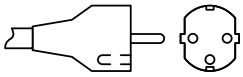

AS3112

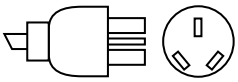

BS-1363

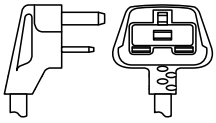

PRODUCT SPECS
Decorative Carving Stations

The Foodwarmer shall be a Decorative Carving Station... as manufactured by the Hatco Corporation, Milwaukee, WI 53234 U.S.A.

The carving station shall have an adjustable, pivoting overhead heat lamp and shall be available as post mount, counter mount, or freestanding with a simulated stone heated base. Heated base units shall be thermostatically controlled and include a sneeze guard and cutting board.

The carving station shall be factory-assembled and ready for electrical installation, with a 6' (1829 mm) cord and plug.

Warranty consists of 24/7 parts and service assistance (U.S. and Canada only).

HATCO CORPORATION | P.O. Box 340500 Milwaukee, WI 53234-0500 U.S.A. | (414) 671-6350

www.hatcocorp.com | customerservice@hatcocorp.com | Find a Hatco Rep | Image Library | Document Library