Project _____

Item # _____

Quantity _____

Cold Shelves Undermount

Models:

CSUR-24-F, -24-I, -24-S, -36-F, -36-I, -36-S, -48-F, -48-I, -48-S

CSUX-24-F, -24-I, -24-S, -36-F, -36-I, -36-S, -48-F, -48-I, -48-S

Hatco's Cold Shelves Undermount are designed to keep your products in the perfect chill zone.

Undermount shelves have the amazing benefit of being able to be installed under the counter top of your choice!

The CSUR, CSUX Remote (R or X) models have the added benefit of allowing design flexibility for fabricators.

Standard features

- Mounts directly to underside of appropriate countertop material
- Approved materials include granite and quartz up to 1 3/16" (30 mm), Swanstone® and certain stainless steel or aluminum surfaces approved by Hatco. Please contact the factory for applications with other material◤
- CSUR units have unattached Condenser and Control Box CSUX have no Condenser (condenser supplied by others) and unattached Control Box
- CSUR condensers utilize R-513A CSUX models allow shelves to be cooled with other refrigerants
- Condensing unit features easy serviceability with sight glass, service valves, dryer/filter and receiver (CSUR models only)
- All units have an Electronic Temperature Control Box with a 4' (1219 mm) lead wire (Standard)
- All models feature an anodized aluminum surface
- Models shipped with a shelf assembly with a temperature probe, assembled TXV valve (shipped loose on CSUR, CSUX models), control box (shipped loose on CSUR, CSUX models), liquid line solenoid valve attached to the shelf (CSUX models only) CSUR models include a condensing unit (CSUR shipped loose), thermal mastic caulk and applicator (CSUR models only)
- All models not available with CE Mark

★ Models available in Domestic, Canadian and Export USD Price Lists only.

◤ Make structural modifications or add bracing underneath the countertop to ensure countertop will support the weight of the unit and its contents.

Options (available at time of purchase only)

☐ Additional four year parts only warranty on the compressor available at time of purchase (U.S. and Canada only)

☐ Longer cord - allows Control Box to be located 7.5' (2286 mm) from unit – 4' (1219 mm) Standard (Export models only)

CSUR models only:

For operation, location and safety information, please refer to the Installation and Operating Manual.

HATCO CORPORATION | P.O. Box 340500 Milwaukee, WI 53234-0500 U.S.A. | (414) 671-6350

www.hatcocorp.com | support@hatcocorp.com | Find a Hatco Rep | Image Library | Document Library | Patents | Chat

Cold Shelves Undermount

Models: CSUR-24-F, -24-I, -24-S, -36-F, -36-I, -36-S, -48-F, -48-I, -48-S
CSUX-24-F, -24-I, -24-S, -36-F, -36-I, -36-S, -48-F, -48-I, -48-S

CSUR, CSUX

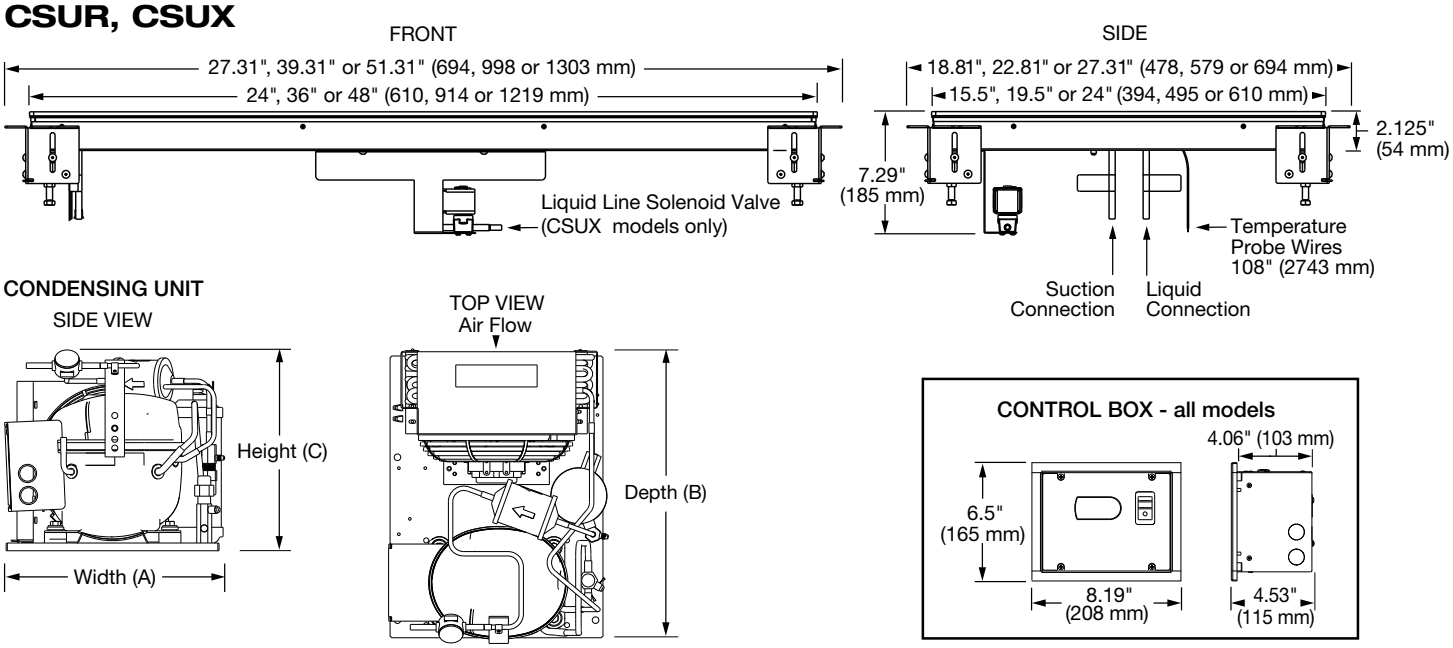

R-404A Condenser Dimensions for Cold Shelves Undermount (For Export Markets Only)

Model	HZ	Voltages	Width (A)	Depth (B)	Height (C)
CSUR-24-F	60	120	11.80" (300 mm)	13.60" (346 mm)	11.40" (289 mm)
CSUX-24-F	50/60	220/230/240	12.10" (307 mm)	13.60" (346 mm)	11.40" (289 mm)
CSUR-24-I	60	120	11.80" (300 mm)	13.60" (346 mm)	11.40" (289 mm)
CSUX-24-I	50/60	220/230/240	12.10" (307 mm)	13.60" (346 mm)	11.40" (289 mm)
CSUR-24-S	60	120	11.80" (300 mm)	13.60" (346 mm)	11.40" (289 mm)
CSUX-24-S	50/60	220/230/240	12.10" (307 mm)	13.60" (346 mm)	11.40" (289 mm)
CSUR-36-F	60	120	11.80" (300 mm)	13.60" (346 mm)	11.40" (289 mm)
CSUX-36-F	50/60	220/230/240	12.10" (307 mm)	13.60" (346 mm)	11.40" (289 mm)
CSUR-36-I	60	120	11.90" (302 mm)	13.60" (346 mm)	11.40" (289 mm)
CSUX-36-I	50	220/230/240	13.10" (333 mm)	16" (406 mm)	11.70" (297 mm)
	60		12.10" (307 mm)	13.60" (346 mm)	11.40" (289 mm)
CSUR-36-S	60	120	11.90" (302 mm)	13.60" (346 mm)	11.40" (289 mm)
CSUX-36-S	50	220/230/240	13.10" (333 mm)	16" (406 mm)	11.70" (297 mm)
	60		12.10" (307 mm)	13.60" (346 mm)	11.40" (289 mm)
CSUR-48-F	60	120	11.90" (302 mm)	13.60" (346 mm)	11.40" (289 mm)
CSUX-48-F	50	220/230/240	13.10" (333 mm)	16" (406 mm)	11.70" (297 mm)
	60		12.10" (307 mm)	13.60" (346 mm)	11.40" (289 mm)
CSUR-48-I	60	120	11.90" (302 mm)	13.60" (346 mm)	11.40" (289 mm)
CSUX-48-I	50	220/230/240	13.10" (333 mm)	16" (406 mm)	11.70" (297 mm)
	60		12.10" (307 mm)	13.60" (346 mm)	11.40" (289 mm)
CSUR-48-S	60	120	13.10" (333 mm)	17.40" (442 mm)	11.80" (300 mm)
CSUX-48-S	50	220/230/240	12.10" (307 mm)	13.60" (346 mm)	11.40" (289 mm)
	60		14.34" (364 mm)	18" (457 mm)	11.80" (300 mm)

Cold Shelves Undermount

Models: CSUR-24-F, -24-I, -24-S, -36-F, -36-I, -36-S, -48-F, -48-I, -48-S
CSUX-24-F, -24-I, -24-S, -36-F, -36-I, -36-S, -48-F, -48-I, -48-S

SPECIFICATIONS

Cold Shelves Undermount - Remote - R
with unattached Condenser and Control Box

The shaded areas contain electrical information for International models

Model	Overall Shelf Dimensions W x D x H	Usable Shelf Space W x D	Compressor Size HP	Volts✖	Watts	Amps	Hz	Approx. Ship Weight
CSUR-24-F	27.31" x 18.81" x 7.29" (694 x 478 x 185 mm)	24" x 15.5" (610 x 394 mm)	1/5	120	300	3.8	60	111 lbs. (50 kg)
			1/3	220	1089	5.0	50	
				230	1190	5.2		
				240	1296	5.4		
				220	1129	5.1	60	
				230	1234	5.4		
				240	1344	5.6		
CSUR-24-I	27.31" x 22.81" x 7.29" (694 x 579 x 185 mm)	24" x 19.5" (610 x 495 mm)	1/5	120	300	3.8	60	108 lbs. (49 kg)
			1/3	220	1089	5.0	50	
				230	1190	5.2		
				240	1296	5.4		
				220	1129	5.1	60	
				230	1234	5.4		
				240	1344	5.6		
CSUR-24-S	27.31" x 27.31" x 7.29" (694 x 694 x 185 mm)	24" x 24" (610 x 610 mm)	1/5	120	300	3.8	60	130 lbs. (124 kg)
			1/3	220	1089	5.0	50	
				230	1190	5.2		
				240	1296	5.4		
				220	1129	5.1	60	
				230	1234	5.4		
				240	1344	5.6		
CSUR-36-F	39.31" x 18.81" x 7.29" (998 x 478 x 185 mm)	36" x 15.5" (914 x 394 mm)	1/5	120	300	3.8	60	137 lbs. (62 kg)
			1/3	220	1089	5.0	50	
				230	1190	5.2		
				240	1296	5.4		
				220	1129	5.1	60	
				230	1234	5.4		
				240	1344	5.6		
CSUR-36-I	39.31" x 22.81" x 7.29" (998 x 579 x 185 mm)	36" x 19.5" (914 x 495 mm)	1/3	120	450	5.9	60	133 lbs. (60 kg)
			3/8	220	826	3.8	50	
				230	904	3.9		
				240	984	4.1		
			1/3	220	1129	5.1	60	
				230	1234	5.4		
				240	1344	5.6		
CSUR-36-S	39.31" x 27.31" x 7.29" (998 x 694 x 185 mm)	36" x 24" (914 x 610 mm)	1/3	120	450	5.9	60	137 lbs. (62 kg)
			3/8	220	826	3.8	50	
				230	904	3.9		
				240	984	4.1		
			1/3	220	1129	5.1	60	
				230	1234	5.4		
				240	1344	5.6		
CSUR-48-F	51.31" x 18.81" x 7.29" (1303 x 478 x 185 mm)	48" x 15.5" (1219 x 394 mm)	1/3	120	450	5.9	60	135 lbs. (61 kg)
			3/8	220	826	3.8	50	
				230	904	3.9		
				240	984	4.1		
			1/3	220	1129	5.1	60	
				230	1234	5.4		
				240	1344	5.6		
CSUR-48-I	51.31" x 22.81" x 7.29" (1303 x 579 x 185 mm)	48" x 19.5" (1219 x 495 mm)	1/3	120	450	5.9	60	166 lbs. (75 kg)
			3/8	220	826	3.8	50	
				230	904	3.9		
				240	984	4.1		
			1/3	220	1129	5.1	60	
				230	1234	5.4		
				240	1344	5.6		
CSUR-48-S	51.31" x 27.31" x 7.29" (1303 x 694 x 185 mm)	48" x 24" (1219 x 610 mm)	5/8	120	800	8.7	60	170 lbs. (77 kg)
			1/2	220	826	3.8	50	
				230	904	3.9		
				240	984	4.1		
			5/8	220	1956	8.9	60	
				230	2138	9.3		
				240	2328	9.7		

★ Available in Domestic, Canadian and Export USD Price Lists only. ✖ All voltages non-CE.

HATCO CORPORATION | P.O. Box 340500 Milwaukee, WI 53234-0500 U.S.A. | (414) 671-6350

www.hatcocorp.com | support@hatcocorp.com | Find a Hatco Rep | Image Library | Document Library | Patents | Chat

Cold Shelves Undermount

Models: CSUR-24-F, -24-I, -24-S, -36-F, -36-I, -36-S, -48-F, -48-I, -48-S
CSUX-24-F, -24-I, -24-S, -36-F, -36-I, -36-S, -48-F, -48-I, -48-S

SPECIFICATIONS

Cold Shelves Undermount - Remote X
with unattached Control Box only (no Condenser)

The shaded areas contain electrical information for International models

Model	Overall Shelf Dimensions W x D x H	Usable Shelf Space W x D	Volts✖	Rated Watts	Amps	Hz	Evaporator Load BTU/Hr	Approx. Ship Weight
CSUX-24-F	27.31" x 18.81" x 7.29" (694 x 478 x 185 mm)	24" x 15.5" (610 x 394 mm)	120	12	0.1	60	844	73 lbs. (34 kg)
			220, 230, 240	17	0.1	50	844	
			220, 230, 240	12	0.1	60	844	
CSUX-24-I	27.31" x 22.81" x 7.29" (694 x 579 x 185 mm)	24" x 19.5" (610 x 495 mm)	120	12	0.1	60	1019	70 lbs. (32 kg)
			220, 230, 240	17	0.1	50	1019	
			220, 230, 240	12	0.1	60	1019	
CSUX-24-S	27.31" x 27.31" x 7.29" (694 x 694 x 185 mm)	24" x 24" (610 x 610 mm)	120	12	0.1	60	1216	85 lbs. (39 kg)
			220, 230, 240	17	0.1	50	1216	
			220, 230, 240	12	0.1	60	1216	
CSUX-36-F	39.31" x 18.81" x 7.29" (998 x 478 x 185 mm)	36" x 15.5" (914 x 394 mm)	120	12	0.1	60	1183	98 lbs. (45 kg)
			220, 230, 240	17	0.1	50	1183	
			220, 230, 240	12	0.1	60	1183	
CSUX-36-I	39.31" x 22.81" x 7.29" (998 x 579 x 185 mm)	36" x 19.5" (914 x 495 mm)	120	12	0.1	60	1385	95 lbs. (44 kg)
			220, 230, 240	17	0.1	50	1385	
			220, 230, 240	12	0.1	60	1385	
CSUX-36-S	39.31" x 27.31" x 7.29" (998 x 694 x 185 mm)	36" x 24" (914 x 610 mm)	120	12	0.1	60	1649	99 lbs. (45 kg)
			220, 230, 240	17	0.1	50	1649	
			220, 230, 240	12	0.1	60	1649	
CSUX-48-F	51.31" x 18.81" x 7.29" (1303 x 478 x 185 mm)	48" x 15.5" (1219 x 394 mm)	120	12	0.1	60	1453	96 lbs. (44 kg)
			220, 230, 240	17	0.1	50	1453	
			220, 230, 240	12	0.1	60	1453	
CSUX-48-I	51.31" x 22.81" x 7.29" (1303 x 579 x 185 mm)	48" x 19.5" (1219 x 495 mm)	120	12	0.1	60	1767	128 lbs. (59 kg)
			220, 230, 240	17	0.1	50	1767	
			220, 230, 240	12	0.1	60	1767	
CSUX-48-S	51.31" x 27.31" x 7.29" (1303 x 694 x 185 mm)	48" x 24" (1219 x 610 mm)	120	12	0.1	60	3009	121 lbs. (45 kg)
			220, 230, 240	17	0.1	50	3009	
			220, 230, 240	12	0.1	60	3009	

★ Available in Domestic, Canadian and Export USD Price Lists only. ✖ All voltages non-CE.

PLUG CONFIGURATION

NEMA 5-15P

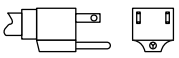

CEE 7/7 Schuko

BS-1363

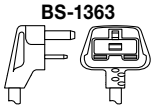

AS3112

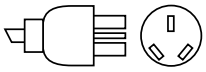

R-513A REFRIGERANT OPERATING SPECIFICATIONS IN 75°F (24°C) AMBIENT

(Refer to the Installation section in the Installation and Operating Manual on the Hatco website)

- Suction Pressure: 6-9 PSIG (0.4-0.6 Bar)
- Discharge Pressure : 115-125 PSIG (7.9-8.6 Bar)
- Superheat: 4-10° F (2.2 to 5.6°C)
- Subcooling: 5-10° F (2.8 to 5.6°C)

MOUNTING BOLT AND SUBSTRATE CUTOUT DIMENSIONS

(Refer to the Installation section in the Installation and Operating Manual on the Hatco website)

FACTORY FILL RATES for R-513A REFRIGERANT

(CSUR condensers are shipped without refrigerants)

Model	Fill Weight	Model	Fill Weight
CSU-24-F	1 lb. 3 oz. (0.539 kg)	CSUR-24-F	1 lb. 13 oz. (0.822 kg)
CSU-24-I		CSUR-24-I	
CSU-24-S	1 lb. 5 oz. (0.595 kg)	CSUR-24-S	1 lb. 15 oz. (0.879 kg)
CSU-36-F	1 lb. 5 oz. (0.595 kg)	CSUR-36-F	1 lb. 15 oz. (0.879 kg)
CSU-36-I	1 lb. 3 oz. (0.539 kg)	CSUR-36-I	1 lb. 13 oz. (0.822 kg)
CSU-36-S		CSUR-36-S	
CSU-48-F	1 lb. 3 oz. (0.539 kg)	CSUR-48-F	1 lb. 13 oz. (0.822 kg)
CSU-48-I		CSUR-48-I	
CSU-48-S	1 lb. 15 oz. (0.879 kg)	CSUR-48-S	2 lb. 8 oz. (1.134 kg)

Cold Shelves Undermount - Remote (R or X models)

The patented Cold Shelves Undermount - Remote (R or X) shall be model … as manufactured by the Hatco Corporation, Milwaukee, WI 53234 U.S.A.

The Cold Shelves Undermount - Remote (R or X) model shall be rated at … watts, … volts, and … inches (millimeters) in overall width.

CSUR shall utilize R-513A refrigerant and include thermal mastic caulk and applicator. CSUR and CSUX models shall consist of surface shelf assembly (mounted under foodsafe material) with temperature probe, unattached TXV valve, unattached Electronic Temperature Control Box, unattached condenser (CSUR models only) and solenoid valve attached to shelf (CSUX models only).

Warranty consists of 24/7 parts and service assistance (U.S. and Canada only).

HATCO CORPORATION | P.O. Box 340500 Milwaukee, WI 53234-0500 U.S.A. | (414) 671-6350

www.hatcocorp.com | support@hatcocorp.com | Find a Hatco Rep | Image Library | Document Library | Patents | Chat