JOB: _____

ITEM NO: _____

INSULATED STAINLESS STEEL AQUATEMP™ HOT CABINET MODEL H-137-WSUA-12D

FEATURES AND BENEFITS:

- Fully insulated hot cabinet keeps prepared foods at serving temperatures.
- Powerful, yet efficient, heating system maintains the right combination of heat and humidity to properly hold products.
- 2000 Watts of heat holds food at up to 200˚F (93˚C).
- AquaTemp system maintains optimum food texture through continuous monitoring of both temperature and humidity. Temperature and humidity values are measured, displayed and controlled through intuitive solid state controller. Air temperature is prioritized over humidity to ensure food safety. Low water indicating LED and water heater shut off when water is at critically low level.
- Stainless steel construction throughout with internal frame in body and doors plus reinforced internal base maintains structural rigidity.
- Smooth interior coved corners prevent food particles/ grease buildup.
- Field reversible insulated Dutch doors with antimicrobial latches prevent temperature loss and protect against spreading germs. Silicone door gaskets for proper seal.
- Standard with right hand hinging; left hand hinging available upon request.
- High temperature ceramic magnetic latches for "easy open"; twist-lock catch keeps door securely closed.
- Recessed push/pull handles on both sides prevent damage to walls; allows easy maneuvering.
- Twelve sets of stainless steel wire universal angles accommodate a large variety of pan sizes on adjustable 1-1/2" centers.
- Integral drip trough on front keeps traffic area dry, safer.
- Heavy duty 5" swivel casters, two with brakes. Provides mobility when fully loaded.



H-137-WSUA-12D



New, easier to use, easy-to-read and operate LED digital display ensures holding at precise food temperatures and moisture content.

ACCESSORIES and OPTIONS (Available at extra cost):

- ❑ Automatic Water Fill System
- ❑ Tempered Glass Door Windows
- ❑ Extra Universal Angles
- ❑ Key Lock Handle
- ❑ Lock Hasp
- ❑ Rear Push Handle
- ❑ Bail Handles
- ❑ 208 or 240 Volt Service
- ❑ 1500 Watt, 15 Amp Power Unit
- ❑ HACCP Documentation (Built-in USB port)

See page B-20 for accessory details

aquatemp

GOLD

Gold indicates our Best Insulated Hot Cabinets with the best warranty in the industry.
3-Year Parts / 1-Year Labor.

CRES COR®
5925 Heisley Road • Mentor, OH 44060-1833
Phone: 877/CRESCOR • Fax: 440/350-7267
www.crescor.com

H-137-WSUA-12D

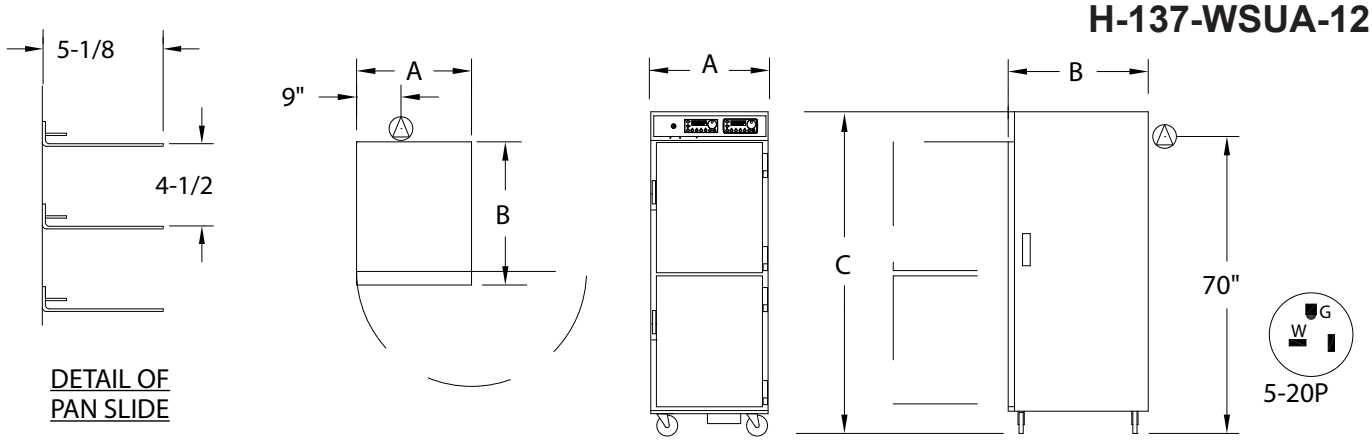

CRES COR MODEL NO.	PAN			DIM "A"	DIM "B"	DIM "C"	INSIDE DIMENSIONS				WEIGHT ACT.
	CAP/ ANGLES	SIZE		WIDTH	DEPTH	HEIGHT	WIDTH	DEPTH	HEIGHT		
H-137-WSUA-12D	12 SETS	SEE NOTE BELOW	IN	28-1/4	32-9/16	73	21-3/4	26-7/8	58	LBS	
			MM	720	830	1855	555	685	1475	KG	

NOTES: 1. Pan sizes 22" x 20" (560 x 510) Roast & Bake Pans, 10" x 20" (255 x 510) Roast & Bake Pans, 18" x 26" (460 x 660) Bun Pans, 14" x 18" (355 x 460) Service Trays, 12" x 20" (305 x 510) Steam Table Pans. Refer to Pan Size Chart at end of section.
2. When ordering bumpers, add 2" to overall dimensions.

ALL CONSTRUCTION IS RIVETED, WELDED AND FINISHED.

GOLD

Gold indicates our Best Insulated Hot Cabinets with the best warranty in the industry.
3-Year Parts / 1-Year Labor.

CABINET:
- Body: 22 ga. stainless steel.
- Reinforcement: Internal framework of 18 ga. stainless steel.
- Insulation: Fiberglass, thermal conductivity (K factor) is .23 at 75˚F. 1-1/2" in doors, top, base; 2" in sidewalls.
- Air tunnels: 22 ga. stainless steel; lift-out type, mounted on sides.
- Push/pull handles (2): 5” vertical; recessed.
- Interior coved corners.

BASE:
- One piece construction, .125 aluminum.
- Drip trough: Formed 18 ga. stainless steel mounted to front of cabinet; removable drip pan.
- Casters: 5" dia., swivel, modulus tires, 1-1/4 wide, load cap. 250 lbs. each, temp. range -45˚/+180˚F. Delrin bearings. Front casters equipped with brakes.

DUTCH DOORS:
- Field reversible.
- Formed 22 ga. stainless steel.
- Latches: Chrome plated steel, high temperature ceramic magnetic type.
- Transport Latches.
- Hinges: Heavy duty chrome plated steel.
- Gaskets: Perimeter type, silicone.
- Pan stops: Embossed.

PAN SLIDES:
- Stainless steel wire universal angles (.306 dia.), mounted on lift-out posts.
- Spaced on 4-1/2" centers; adjustable on 1-1/2" centers.

Scan QR code to view Spec Sheet, Operating Manual, Wiring Diagram or to call Customer Service.

If you need a QR reader visit your App Store on your Smartphone or Tablet.

HOT UNIT COMPONENTS:
- Thermostat (holding): Solid state digital display control, room ambient to 200˚F (93˚C).
- Thermostat (humidity): Solid state digital display control, room ambient to 95%.
- Switch: ON-OFF push button type.
- Power cord: Permanent, 10 ft., 12/3 ga.
- Heater: 2000 Watts for holding.
- Blower motor.
- Vent fan.
- Water pan: 4 gallons; 16 ga. stainless steel with 1850 Watt heater for humidity.
- Thermometer: Digital.

POWER REQUIREMENTS:
- 2000 Watts, 120 Volts, 60 Hz., single phase, 16 Amps., 20 Amp. service.

SHORT FORM SPECIFICATIONS

Cres Cor Insulated AquaTemp Hot Cabinet Model H-137-WSUA-12D. Solid state electronic controlled time, temperature and moisture content. Cabinet 22 ga. stainless steel; stainless steel internal frame. (12) sets stainless steel wire universal angles for multiple pan sizes, adjustable spacing every 1-1/2". Field reversible Dutch doors, 22 ga. stainless steel. Fiberglass insulation in sides 2"; doors, top, base 1-1/2". Interior coved corners. 2000 Watt, 120 Volt power unit; adjustable heat and humidity. One piece insulated base, .125 aluminum. 5" swivel modulus casters, Delrin bearings. Load capacity 250 lbs. each.
3-Year Parts/ 1-Year Labor warranty. Provide the following accessories: ____ ____ ____ . NSF, CSA-US, CSA-C listed.

In line with its policy to continually improve its products, CRES COR reserves the right to change materials and specifications without notice.

CRES COR®
5925 Heisley Road • Mentor, OH 44060-1833
Phone: 877/CRESCOR • Fax: 440/350-7267
www.crescor.com
© Crescent Metal Products, Inc. 2014 All rights reserved.

Litho in U.S.A.