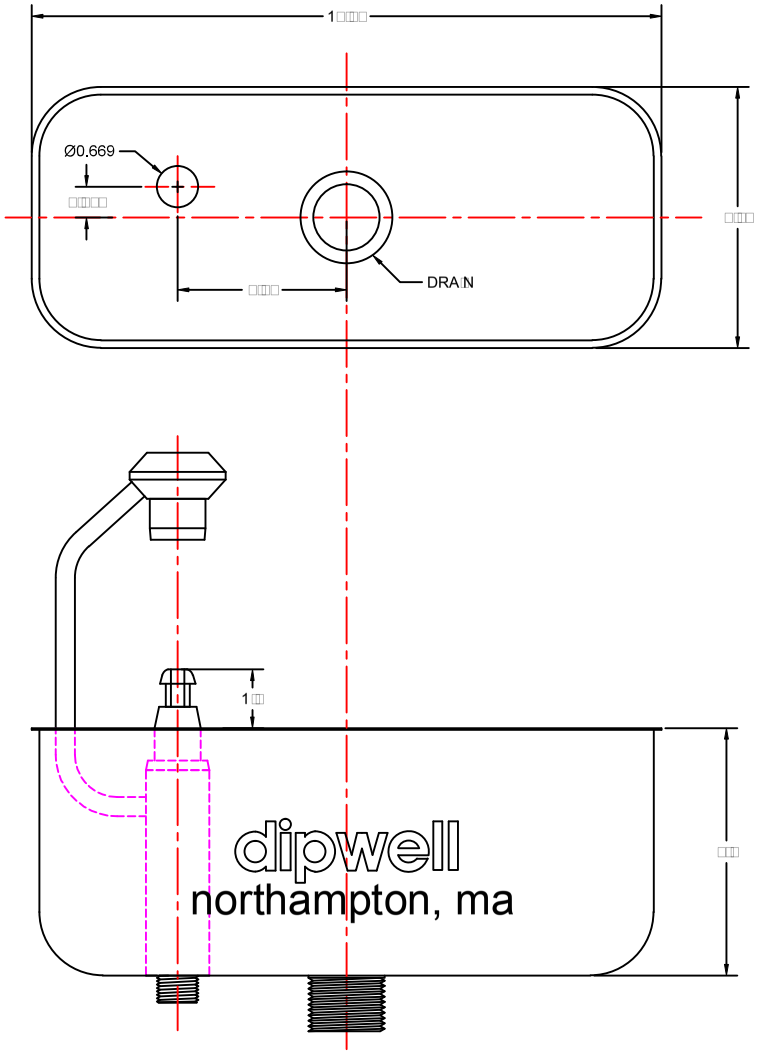

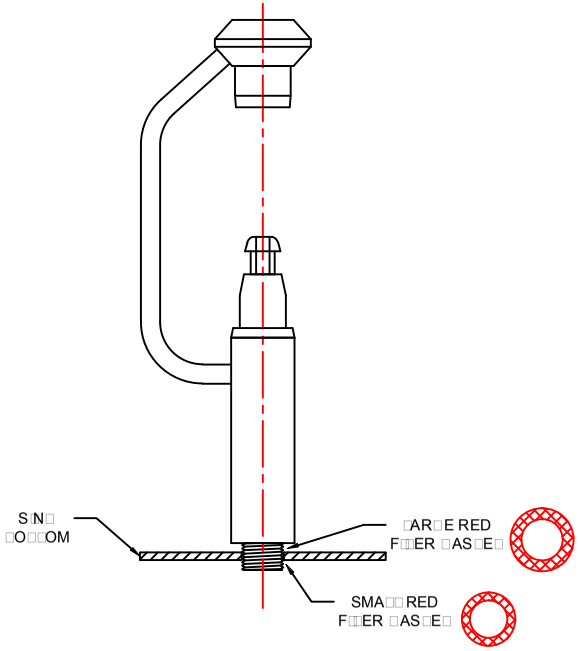

SPECIFICATIONS:

- LENGTH: 10 INCHES
- WIDTH: 4-1/4 INCHES
- HEIGHT: 4 INCHES
- DRAIN HOLE: 1-1/6 INCH DIAMETER
- MOUNTING HOLES: 4 EACH 1/4 INCH, 4 INCH SPACING

U.S. FOOD & DRUG ADMINISTRATION:

THE DIPWELL™ COMPLIES WITH THE FDA'S FOOD SERVICE SANITATION MANUAL, CHAPTER 3-304.12 IN-USE UTENSILS, BETWEEN USE STORAGE

OERANES IN ESS OER SE NOED
ANGULAR.....± 0,5°
FRACTIONAL.....± 1/32"
ONE PLACE DECIMAL.....± 0,1"
TWO PLACE DECIMAL.....± 0.01"
THREE PLACE DECIMAL.....± 0,005"

dipwell™ company
106 INDUSTRIAL DRIVE NORTHAMPTON, MA 01060

E O RINSE SOOP SOO ER

REV	DRAIN NUMBER
-	

DRAN M	DATE 3/1/1