Item #: 348SM30 Project: _____

Qty: _____ Date: _____ Approval: _____

Estella SM30 30 qt. / 45 lb. Two-Speed Spiral Dough Mixer - 110V, 2 HP

Item #348SM30







Technical Data

Width	17 Inches
Depth	29 1/2 Inches
Height	35 1/4 Inches
Amps	13.6 Amps
Hertz	60 Hertz
Phase	1 Phase
Voltage	110 Volts
Wattage	1500 Watts
Bowl RPM	15 - 20 RPM
Hook RPM	112 - 198 RPM
Horsepower	2 HP
Mixer Type	Spiral
Number of Mixing Heads	1
Plug Type	NEMA 5-15P
Power Type	Electric
Removable Bowl	Without Removable Bowl
Speeds	2
Timer	With Timer
Transmission Type	Belt-Driven
Type	Spiral Mixers
Volume Capacity	30 qt.
Weight	220 lb.
Weight Capacity	45 lb.

Features

- Spiral mixer design mixes dough more efficiently than other mixing styles
- Durable fixed 30 qt. stainless steel mixing bowl with 26 lb. flour and 45 lb. dough capacity
- Includes 30 minute timer with auto-stop feature allows for multi-tasking in a busy kitchen
- Ideal for bakeries and pizzerias that use large amounts of dough
- 2 speeds for optimal precision; 110V, 2 HP

Certifications

5-15P ETL Sanitation ETL US & Canada

© 2022 Estella Bakery Equipment

Plan View

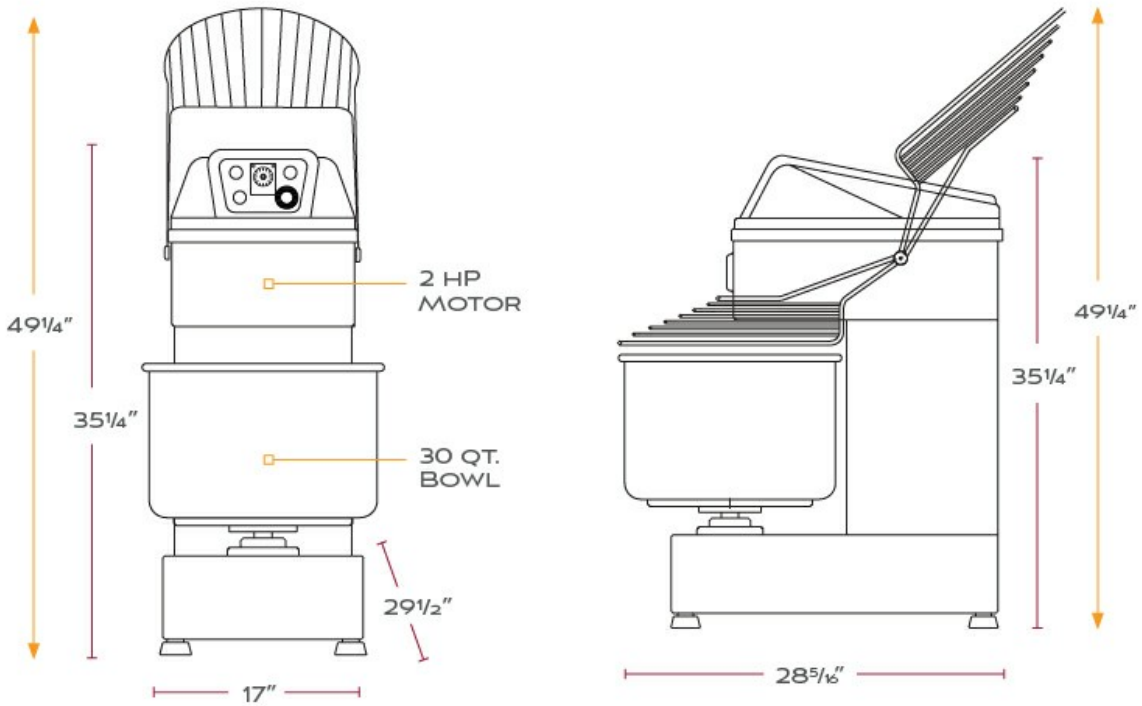

Notes & Details

The Estella SM30 45 lb. spiral dough mixer will handle a range of dough products at your bakery, pizzeria, or restaurant. Designed with commercial applications in mind, this dough mixer has a durable 30 qt. stainless steel bowl, and it can handle a flour capacity of 26 lb. and a dough capacity of 45 lb. Whether you're prepping pizzas, cookies, or bread, you'll notice a notable uptick in your kitchen efficiency once you install this unit in your establishment.

This spiral dough mixer has an intuitive control panel that includes a timer, which will keep careful track of how long the mixer churns and prevent the dough from becoming overworked. As a built-in precaution, the mixer has an auto stop failsafe that will turn off the unit once the timer hits zero, which is helpful for when employees are preoccupied with other tasks throughout the kitchen. The Estella SM30 45 lb. mixer also features a steel grated lid that allows for ingredients such as flour to be added to the dough as it is mixing without having to shut it off. The grate also keeps employees from sticking their hands in the bowl when the mixer is on, improving safety.

This unit's 2-speed, belt-driven motor, which has a power output of 1500W, will handle a strenuous workload while yielding impressive results. The hooks and bowls can operate on 2 different speeds - the hooks run at low (112 rpm) and high (198 rpm), while the bowl operates on low (15 rpm) and high (20 rpm). A sturdy base will keep the mixer in place while handling the rigors of commercial establishments. This unit requires a 110V electrical connection for operation.

⚠ **WARNING:** This product can expose you to chemicals including lead, which are known to the State of California to cause cancer, birth defects, or other reproductive harm. For more information, go to www.p65warnings.ca.gov.

© 2022 Estella Bakery Equipment