WE RAISE THE BAR. WE SET THE STANDARD.

Project _____ Item Number _____ Quantity _____

DR350

SCREW ROUNDER

Univex Corporation

Screw Rounder

Models: DR350

- 3oz - 50oz dough ball capacity

Features:

- Solid and sturdy construction
- Practically maintenance free
- Start and stop button with saftey trip switch
- Easily removable center screw
- Stainless steel dough output tray
- Aluminium rounding screw suitable for food contact
- Rotating wheels: 2 + 2 with brake
- 65% maximum dough hydration
- Easy to clean NSF certified plastic cylinder

Warranty:

- One year parts & labor

Univex Corporation
www.Univexcorp.com

3 Old Rockingham Rd
Salem, NH 03079
United States of America

TEL: (800)258-6358
INTL TEL: (603)893-6191
FAX: (800)356-5614
INTL FAX: (603)893-1249

Printed in U.S.A.

01/2025

WE RAISE THE BAR. WE SET THE STANDARD.

Screw Rounder

DR350

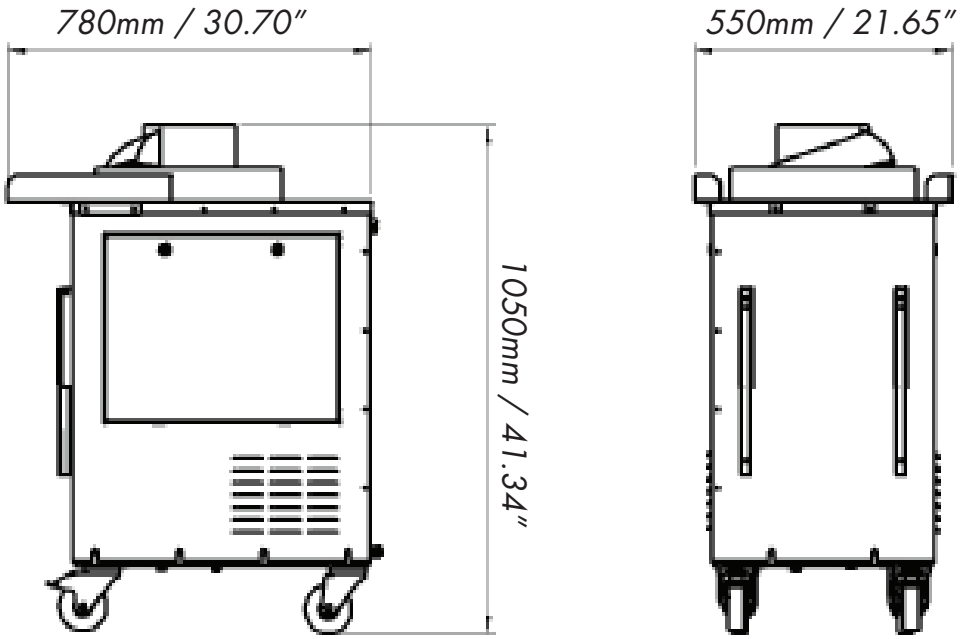

Electrical Information			
	Voltage	Phase	Amps
Standard	115	1	4.6

Shipping Information		
Net Weight	Shipping Weight	Overall Dimensions
265 lbs. (120Kg)	440 lbs. (200Kg)	38.5" (980mm) x 33" (830mm) x 46" (1160mm)

Univex Corporation
www.Univexcorp.com

3 Old Rockingham Rd
Salem, NH 03079
United States of America

TEL: (800)258-6358
INTL TEL: (603)893-6191
FAX: (800)356-5614
INTL FAX: (603)893-1249

Printed in U.S.A.

01/2025