Item #: 177HEAT1836 Project: _____

Qty: _____ Date: _____ Approval: _____

Avantco HEAT-1836 Full Size Non-Insulated Heated Holding Cabinet with Clear Door - 120V

Item #177HEAT1836

Technical Data

Width	22 11/16 Inches
Depth	32 3/4 Inches
Height	66 7/16 Inches
Interior Width	18 3/16 Inches
Interior Depth	27 1/8 Inches
Interior Height	53 13/16 Inches
Hertz	60 Hertz
Phase	1 Phase
Voltage	120 Volts
Wattage	1440 Watts

Features

- Full size uninsulated design holds up to 36 full size sheet pans; 1 1/2" of clearance between slides
- Full heat mode with 9 adjustable temperature settings up to 185 degrees Fahrenheit
- Lexan clear door with magnets and tight-fitting gasket
- Integrated easy-to-read LED display on removable bottom control drawer
- 120V, 1440W

Certifications

NSF Listed UL Listed, US 5-15P

Avantco Equipment

© 2024 Avantco Equipment

Avantco Equipment

Technical Data

Cabinet Size	Full Height
Casters	With Casters
Color	Silver
Construction	Aluminum
Control Type	Manual
Door Type	Clear
Dutch Half Doors	Without Dutch Half Doors
Features	NSF Listed
Full Size Sheet Pan Capacity	36 Pans
Hinge Location	Left Right
Insulated	Without Insulation
Interior Configuration	Lip Load Slides
Maximum Temperature	185 Degrees F
Number of Doors	1 Doors
Plug Type	NEMA 5-15P
Power Type	Electric
Sections	1 Section
Style	Reach-In
Type	Holding Cabinets

Plan View

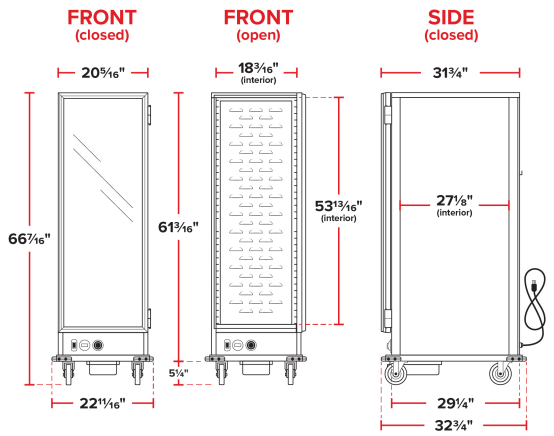

© 2024 Avantco Equipment

Avantco Equipment

Notes & Details

Designed to keep all your freshly cooked food items hot until they're ready to serve, this Avantco HEAT-1836 full size non-insulated heated holding cabinet helps ensure your restaurant, diner, or bakery is always prepared for high volume meal periods. Boasting nine adjustable holding settings and a heat mode that can reach 185 degrees Fahrenheit, this cabinet is perfect for storing a wide variety of ready-to-serve dishes.

A total of 36 lip-load pan slides accept full size 18" x 26" sheet pans, while a Lexan clear door provides oustanding impact and heat-resistance as well as allowing for easy monitoring of the contents inside. For valuable temperature protection, the door is paired with both magnets and a tight-fitting gasket to ensure the warm air inside does not escape. You can also reverse the door hinges based on your needs. An easy-to-read thermometer for effortless temperature monitoring and a pair of dials is located on the unit's bottom control drawer that can also be removed for quick cleaning. Thanks to four 5" poly casters, this cabinet can be filled and moved from your prep location to the serving area with incredible ease, while integrated corner bumpers protect nearby walls and equipment during transport. The Avantco HEAT-1836 full size cabinet requires a 120V electrical connection.

⚠ **WARNING:** This product can expose you to chemicals including lead, which are known to the State of California to cause cancer and birth defects or other reproductive harm. For more information, go to www.p65warnings.ca.gov.

© 2024 Avantco Equipment