AR-7T
Self-Cleaning, Electric Rotisserie
Touchscreen Control

Alto-Shaam rotisserie ovens offer quality your customers can see to improve your profits for a quick return on your investment. Safe, simple and efficient cooking — and cleaning — so you can focus on the food and not the waste. Convection and radiant heat create the perfect crispy, brown finish.

Exclusive, hands-free self-cleaning design saves time and uses 35% less water than traditional models during the automatic cleaning process

Superior reliability with no moving parts in the cleaning system

Built-in automatic grease collection system during the cook cycle pumps grease into jugs that are easily wheeled away for safe and quick disposal

Perfect crispiness and even browning with flexibility to choose from seven browning levels

Attractive design and illuminated interior highlight the food for your customers to help boost impulse sales

Made in the USA with a commitment to quality

Standard Features

- Programmable touchscreen control with multi-level cooking for preheat, two cook settings, hold and cool down stages
- Self-cleaning wash system with built-in sanitizing cycle
- 30-minute rinse cycle
- Double-pane glass door
- USB port for easy recipe upload and download
- Seven V-spits (angled spits) with multi-hole disks
- See **Options & Accessories** for factory-installed options

AR-7T shown with curved glass door, liquid soap cleaning system, automatic grease collection system, stand, and mobile grease collection cart.

Capacity

21 with standard angled spit: twenty-one (21) 3-1/2 lb (1.6 kg) chickens or twenty-eight (28) 2-1/2 to 3 lb (1.1 to 1.4 kg) chickens.

28 with optional piercing spit: twenty-eight (28) 2-1/2 to 3-1/2 lb (1.1 to 1.6 kg) chickens.

3 with optional turkey spit: one (1) 25 lb (11 kg) turkey per spit.

Food Capacity

AR-7T: 98 lb (44 kg)

Configurations (select one)

Electrical

- ☐ 208V 1PH
- ☐ 208V 3PH
- ☐ 240V 1PH
- ☐ 240V 3PH
- ☐ 380–415V 3PH

See page 5 for additional required configuration selections

Accessories

See page 5

AR-7T
Self-Cleaning, Electric Rotisserie
Touchscreen Control

Specifications

CHECK FIRST

- The oven must be installed level
- Exhaust ventilation is required
- Install on a non-combustible surface only
- The oven must not be installed in any area where it may be affected by steam, grease, dripping water, high temperatures, or any other severely adverse conditions
- In order to maintain NSF standards, countertop models must be sealed at the bottom by an NSF approved sealant or equipped with minimum 4" (102mm) legs

CLEARANCE

Left: 11" (279mm) Recommended: 18" (457mm) for service access on the control side. If adequate service clearance is not provided, it will be necessary to disconnect the water and drain to move the oven with a fork lift for service access. Charges in connection with inadequate service access are not covered under warranty.

Right: **6" (152mm)**
Back: **6" (152mm)**
Top: **12" (305mm)**
Bottom: **0" (0mm)**

DIMENSIONS

Model	Exterior (H x W x D)	Net Weight
AR-7T, flat glass, solid back (reach-in)	40-5/8"* x 43-3/4" x 32-1/2" (1032mm* x 1113mm x 825mm)	361 lb (164 kg)
AR-7T, flat glass, pass-through	40-5/8"* x 43-3/4" x 35-7/8" (1032mm* x 1113mm x 911mm)	361 lb (164 kg)
AR-7T, curved glass, solid back (reach-in)	40-5/8"* x 43-3/4" x 32-1/4" (1032mm* x 1113mm x 818mm)	361 lb (164 kg)
AR-7T, curved glass, pass-through	40-5/8"* x 43-3/4" x 35-3/8" (1032mm* x 1113mm x 897mm)	361 lb (164 kg)

* Minimum leg height 4" (102mm). Countertop models may require 6" (152mm) leg height to accommodate grease collection: height is 42-5/8" (1083mm).

	Ship Dimensions (L x W x H)*	Ship Weight*
AR-7T	56" x 45" x 51" (1422mm x 1143mm x 1295mm)	440 lb (200 kg)

*Domestic ground shipping information. Contact factory for export weight and dimensions.

WATER

Requirements

- One (1) water inlet, drinking quality (treated)
- Treated water inlet: 3/4" NPT
- Water temperature range: 50°–140°F (10°–60°C)
- Line pressure min. 30 psi (200 kPa) dynamic, max. 90 psi (600 kPa) static
- Two (2) gallons (7.6 L) per minute minimum flow
- One (1) 3/4" ID water supply shut-off valve and back-flow preventer per rotisserie where required by local code
- Water drain: 3/4" NPT connection with air gap at floor. Materials must withstand temperatures up to 200°F (93°C).
- Floor drain within 3' (914mm) of rotisserie. Drain may not be directly below rotisserie.

It is the sole responsibility of the owner/operator/purchaser of this equipment to verify that the incoming water supply is comprehensively tested and, if required, a means of water treatment provided that would meet compliance requirements with the published water quality standards shown here. Non-compliance with these minimum standards will potentially damage this equipment and/or components and void the original equipment manufacturer's warranty. Alto-Shaam recommends using OptiPure® (www.optipurewater.com) products to properly treat your water.

Contaminant	Inlet Water Requirement
Free Chlorine:	less than 0.2 ppm (mg/L)
Hardness:	30–170 ppm
Chloride:	less than 50 ppm (mg/L)
pH:	7.0–8.5
Silica:	less than 12 ppm (mg/L)
Total Dissolved Solids (TDS):	50–360 ppm
Chloramine:	less than 0.2 ppm (mg/L)

ELECTRIC

Requirements

- One (1) dedicated circuit per rotisserie.
- Junction box or electrical disconnect within 3' (914mm) of rotisserie.
- Electrical connections and circuit breakers must meet all applicable federal, state and local codes.

V	Ph	Hz	Connections	A	Breaker	kW	Plug Configuration
208	1	60	L1, L2/N, G	47.0	60	9.4	No cord, no plug
240	1	60	L1, L2/N, G	41.0	50	9.4	No cord, no plug
208	3	60	L1, L2, L3, G	28.0/Ph	35	9.4	No cord, no plug
240	3	60	L1, L2, L3, G	24.5/Ph	35	9.4	No cord, no plug
380-415	3	50/60	L1, L2, L3, N, G	24.8/Ph	35	9.4	No cord, no plug

ANSI/NSF 4

IP X4

AR-7T Self-Cleaning, Electric Rotisserie

Touchscreen Control

ALTO-SHAAM

Side

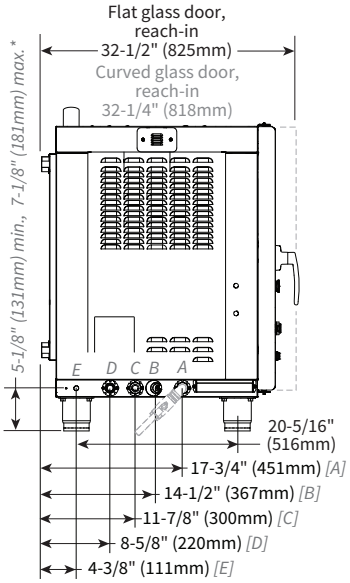

Curved glass door, pass-through: +2-7/8" (73mm)
Flat glass door, pass-through: +3" (76mm)

[A] = Grease drain
[B] = Electrical connection
[C] = Water drain
[D] = Water inlet
[E] = Liquid cleaner hose

Front

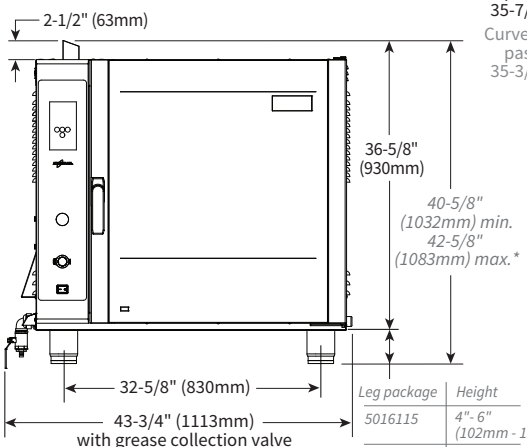

Shown with legs 5016115

**6" (152mm) leg height may be required for countertop installation*

Leg package	*Height*
5016115	*4"- 6" (102mm - 152mm)*
5017128	*4"- 6" (102mm - 152mm)*
5024950	*5-1/8" (1130mm)*
5001614	*2" (51mm)*

Top

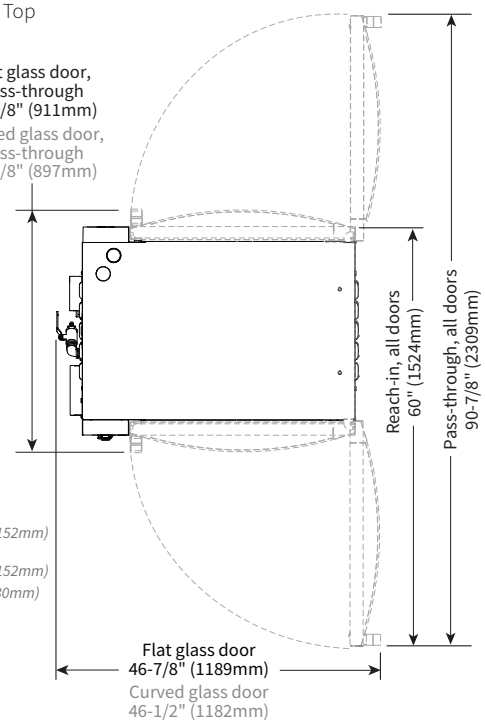

Options and Accessories Dimensions

Liquid Cleaning System

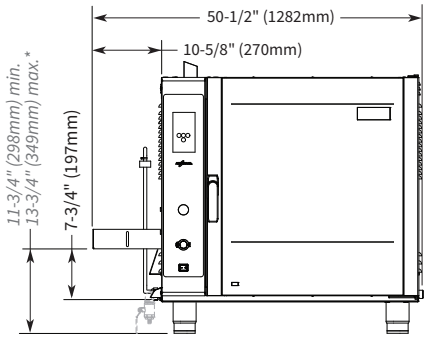

Grease Collection Cart

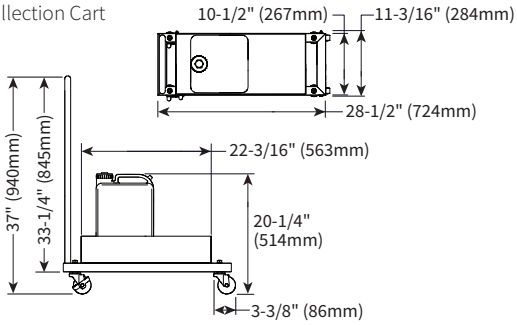

Stand

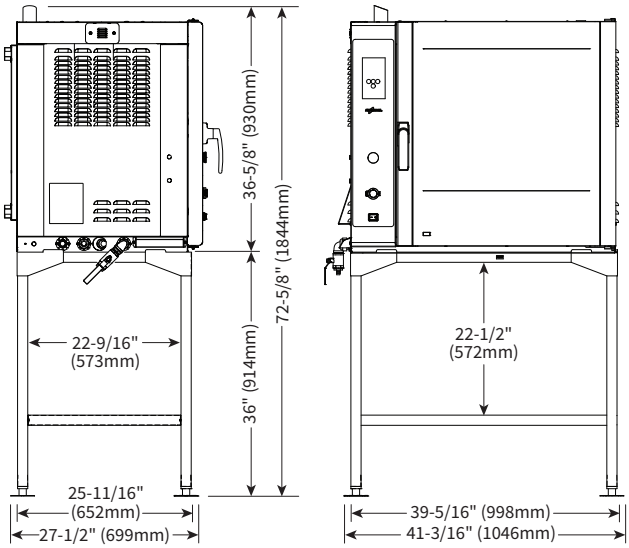

AR-7T
Self-Cleaning, Electric Rotisserie
Touchscreen Control

Stacked Configurations (Factory Installed)

- ☐ AR-7T over AR-7T (on seismic feet 5017128)
- ☐ AR-7T over AR-7T (on mobile base 5024950)
- ☐ AR-7T over AR-7HT (on seismic feet 5017128)

AR-7T over AR-7HT shown with curved glass doors, liquid soap cleaning system, automatic grease collection system,and mobile grease collection cart.

AR-7T over AR-7T

Stacked Configuration

(Seismic Feet)

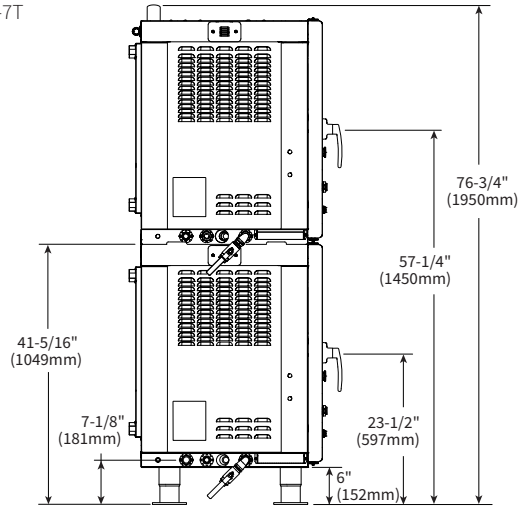

Shown with fully extended feet 5017128

AR-7T over AR-7HT

Stacked Configuration

(Mobile Base)

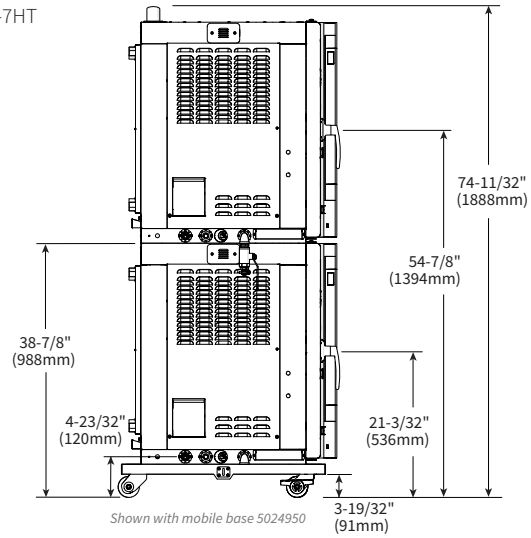

Shown with mobile base 5024950

AR-7T over AR-7HT

Stacked Configuration

(Seismic Feet)

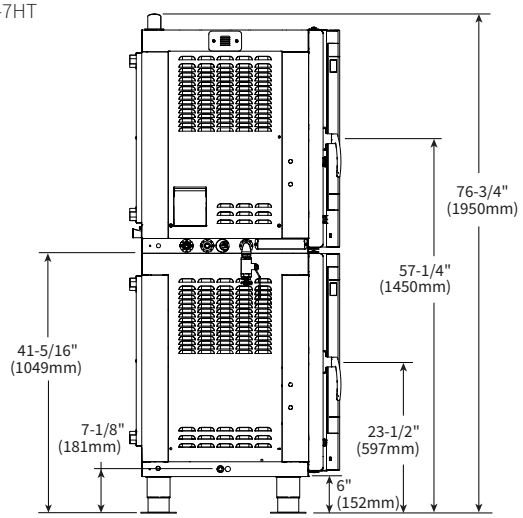

Shown with fully extended seismic feet 5016115

AR-7T
Self-Cleaning, Electric Rotisserie

Touchscreen Control

Options and Accessories

Configurations

Door Configuration (choose only one)

- ☐ Flat glass, solid back (reach-in)
- ☐ Curved glass, solid back (reach-in)
- ☐ Flat glass, double doors (pass-through)
- ☐ Curved glass, double doors (pass-through)

Legs (choose only one)

- ☐ 4–6" (102–152mm) (5016115)
- ☐ 6" (152mm) (5017128) with flanged feet. Allows rotisserie to be bolted to floor.
- ☐ 2" (51mm) (5001614) rubber. For 380-415V countertop units only; not available on models built for the US or Canada. Subtract 2-1/8" (56mm) from height.
- ☐ Mobile base (5024950)

Cleaning System (choose only one)

- ☐ Automatic tablet cleaning system. Includes grease collection system and one (1) five-gallon (18.9 liter) grease collection container with shut-off valve (Standard).
- ☐ Automatic liquid cleaning and grease collection system — Pumps through the system for a deep cleaning, hands-free process. Includes one (1) removable support tray for liquid cleaner container and one (1) five-gallon (18.9 liter) grease collection container with shut-off valve. Support tray mounts to left side near front of rotisserie. Change to Spec: add 6-7/8" (175mm) to width.

Accessories (select all that apply)

- ☐ Stainless steel stand with storage shelf (FR-38177)
- ☐ Stainless steel stand with storage shelf (FR-38177), and seismic brackets (5023312)

Alternative Spit Assemblies / Basket Assemblies (select one)

- ☐ Standard V-spit (5021700; included with oven)
  Assembly includes two multi-hole disks* and seven (7) standard V-spits. (*accommodates all options except large V-spits)
  Use with turkey spits (5022196 sold individually)
- ☐ Piercing spits only (5022566; includes two (2) piercing-spit disks and seven (7) piercing spits)
- ☐ Standard V-spits only (5024025; includes two (2) V-spit disks and seven (7) standard V-spits)
- ☐ Piercing spits and basket (5025223; includes two (2) piercing/basket disks, seven (7) piercing spits, and seven (7) baskets)
- ☐ Basket only (5025517; includes two (2) basket disks and 7 baskets)
- ☐ Large V-spit and piercing (5027606; includes two (2) disks, seven (7) piercing spits, and four (4) large V-spits) (Accommodates either standard V-spits or large V-spits.)

Grease Collection (specify quantity)

- ☐ Additional five-gallon (18.9 liter) grease collection container with cap (5014846)
- ☐ Mobile collection cart (5014542), accommodates two (2) grease collection containers

Cleaning Supplies (specify quantity)

- ☐ CombiClean® CombiTabs™ (CE-36354) — specially formulated for Alto-Shaam ovens. Ninety (90) water-soluble tablets per container, sold in boxes of two (2)
- ☐ Liquid Cleaner (CE-36457) — approved for Alto-Shaam ovens equipped with automatic liquid cleaning system
- ☐ Combitherm® Cleaning Liquid (CE-24750) — specially formulated for Alto-Shaam ovens. Twelve (12) 1 quart (c. 1 liter) spray bottles per case [requires special handling]

Warranty

- ☐ Extended warranty begins at the end of standard warranty and continues for twelve (12) additional months. Consult the Alto-Shaam website for standard warranty terms.

Custom Colors

- ☐ Available upon request — allow an additional 6-week lead time.

CONTACT US

W164 N9221 Water Street | Menomonee Falls, Wisconsin 53051 | U.S.A.
Phone: 262.251.3800 | 800.558.8744 U.S.A./Canada | Fax: 262.251.7067 | **alto-shaam.com**

AR-SPC-000324 - 09/20 Printed in U.S.A. Due to ongoing product improvement, specifications are subject to change without notice.