AMERICAN SPECIALTIES, INC. 441 Saw Mill River Road, Yonkers, NY 10701 (914) 476-9000	MODEL No:	64676-2
	ISSUED:	1-87
	REVISED:	9-04

SEMI-RECESSED PAPER TOWEL DISPENSER AND WASTE RECEPTACLE

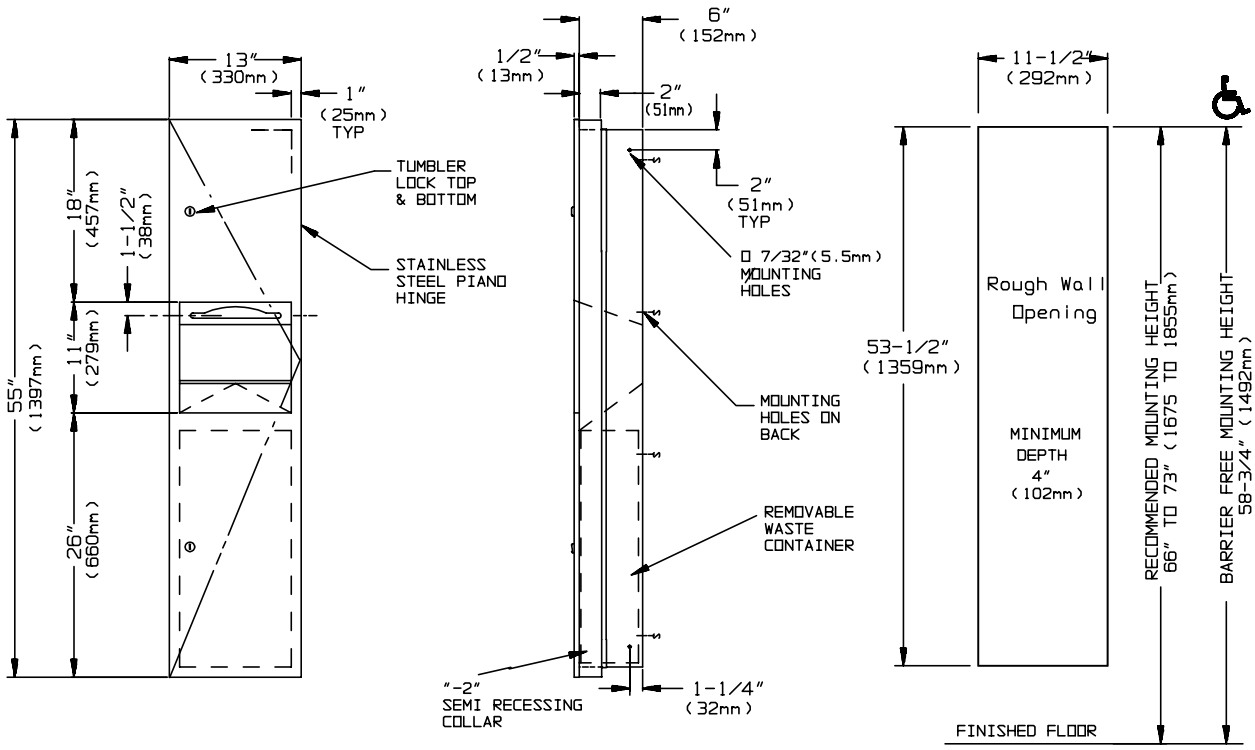

SPECIFICATION

Semi-Recessed Paper Towel Dispenser and Waste Receptacle shall hold and dispense 800 standard multi-fold, 600 standard C-fold or 1100 standard single-fold paper towels, and shall have a waste capacity of 7 gal. (25 liters). Cabinet, door, skirt, dispenser and waste receptacle shall be fabricated from alloy 18-8 stainless steel, type 304. Full face door shall be 18 gauge formed from one piece with no miters, welding or open seams on face with a 1/2" (13mm) return to wall and shall be attached to cabinet at side with a full length 3/16" (5mm) stainless steel multi-staked piano hinge and be held closed with two (2) tumbler locks keyed like other ASI washroom equipment. Cabinet shall be 20 gauge and skirt shall be 22 gauge. Towel dispensing slot shall have a fully hemmed-in rolled edge for snag-free dispensing and user safety. Adjustable guide shall be provided to allow dispensing of single-fold, multi-fold or C-fold paper towels. Waste receptacle shall have hemmed edges for safety. Waste receptacle door shall be attached to cabinet with a spring-loaded stainless steel piano hinge and shall have the international waste symbol on face. Structural assembly of all components shall be of welded construction. All exposed surfaces shall be № 4 satin finish and shall be protected during shipment with a PVC film easily removable after installation. Unit shall be supplied with a SR collar (skirt) to convert to semi-recessed mounting.

Semi-Recessed Paper Towel Dispenser and Waste Receptacle shall be Model № 64676-2 as manufactured by American Specialties, Inc., 441 Saw Mill River Road, Yonkers, New York, 10701-4913.

INSTALLATION

Unit is mounted in wall recess with four (4) № 10 self-tapping screws (by others) through mounting holes in cabinet. For compliance with ADA Accessibility Guidelines, install unit so that center line of towel dispenser slot is 54" (1372mm) maximum above finished floor (AFF) if clear floor side reach access is provided or 48" (1219mm) maximum AFF if clear floor forward reach access only is provided. For general utility the unit should be installed with its bottom edge 16-3/4" (425mm) AFF. Note that bottom of RWO is 3/4" above bottom of unit. SR collar is installed on cabinet prior to mounting in wall recess following procedure described on SR Collar Data Sheet.

Rough Wall Opening (RWO) required is.... 11-1/2" W x 53-1/2" H x 4 " D minimum(292mm x 1359mm x 102mm)

OPERATION

Towels are self-feeding until supply is depleted. Unit may be reloaded with a partial load in-place and will continue to feed properly. Waste receptacle is emptied manually on a cycle determined by maintenance needs. Locking door prevents unauthorized access or removal.