VOLLRATH®

Project:

Item Number:

Quantity:

FORCED-AIR COLD-PAN DROP-INS

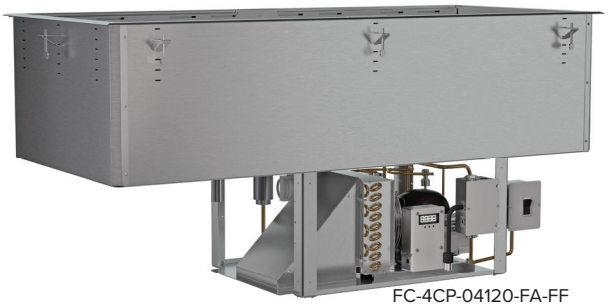

FC-4CP-04120-FA-FF

DESCRIPTION

These made-in-the U.S.A. units feature dual-forced air that flows across two sides for more-even and consistent chilling. A simple-to-operate On/Off switch can be custom mounted for operator convenience.

AGENCY LISTINGS

c UL us LISTED

NSF

WARRANTY

All models shown come with Vollrath's standard warranty against defects in materials and workmanship with an additional four years on the compressor. For full warranty details, please refer to vollrathfoodservice.com.

Approvals	Date

Due to continued product improvement, please consult vollrathfoodservice.com for current product specifications.

ITEMS

Item/Model	Description
FC-4CP-03120-FA	3-Pan Forced-Air Drop-In Standard
FC-4CP-03120-FA-FF	3-Pan Forced-Air Drop-In Flat Flange
FC-4CP-04120-FA	4-Pan Forced-Air Drop-In Standard
FC-4CP-04120-FA-FF	4-Pan Forced-Air Drop-In Flat Flange

FEATURES & BENEFITS

- Dual-forced air across two sides provides even, consistent chilling.
- On/off switch with 4 ft. (1.2 m) cord can be mounted to any side.
- Food is displayed prominently with the shallow recess.
- Full-perimeter drip edge has a molded breaker gasket underneath.
- Top and well are durable 18-gauge, 300-series stainless steel.
- Exterior housing is 18-gauge galvanized steel.
- Units utilize R290 refrigerant, which has a lower GWP (Global Warming Potential) than many previously-used refrigerants.
- Factory-set cold control on compressor provides mini-defrost with every compressor cycle.
- The inner-well assembly is insulated with foamed-in-place polyurethane for efficiency and performance.
- Well accepts food pans up to 6" (15.2 cm) deep.
- ¾ in. (1.9 cm) integral drain is standard (no master shut off).
- 6 ft (1.5 m) cord with plug is included.

CLEARANCE AND ENVIRONMENT

NOTICE: *Follow all regulations, warnings, and cautionary guidance specific to products that utilize R290 refrigerant.*

- Needed clearance is zero on sides, 3" (7.6 cm) from the condenser air inlet and outlet, and 1.5" (3.8 cm) at the bottom.
- Requires at least 80 square inches for both fresh-air intake and exhaust. See back page for details.
- Minimum countertop height is 30" (76.2 cm).
- Unit is made for indoor use only in ambient temperatures below 86 °F (30 °C). Warmer temperatures or modifying refrigeration settings will take unit out of NSF compliance and could void the warranty.
- Prevent drafts and room air currents from disturbing the curtain of cold air immediately above the food pans.
- Unit must be used with adapter bars or templates.
- Relative room humidity should be a maximum of 60% to reduce frost.

DIMENSIONS — Shown in inches (cm)

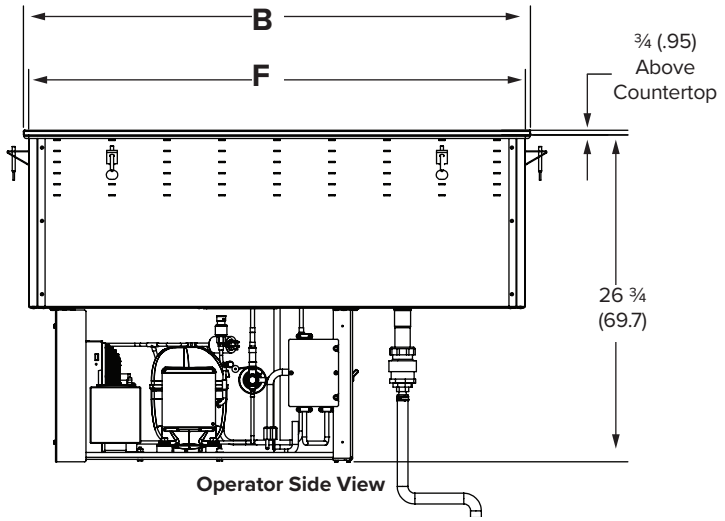

Operator Side View

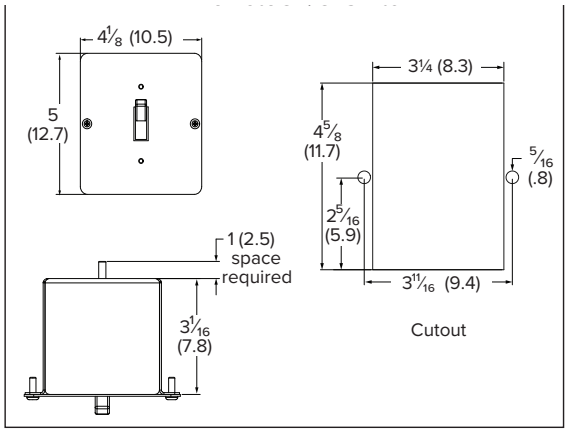

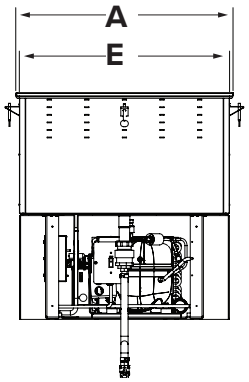

Side View

VENTING REQUIREMENTS

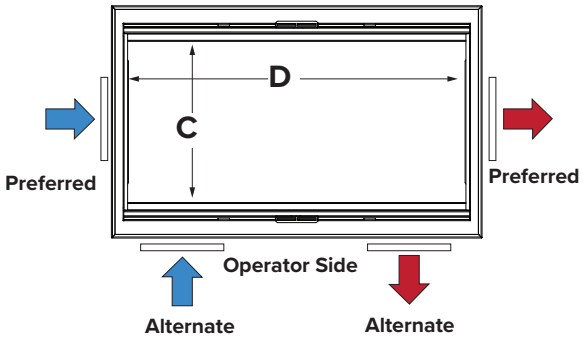

One customer-supplied intake and discharge louver must be installed in the cabinet to ensure adequate ventilation; preferred locations are the short ends.

SPECIFICATIONS

Item	Pans	Dimensions Shown in inches (cm)						On/Off Switch	Louvers	Weight lb (kg)	Comp. (HP)	Peak Heat of Rej. (BTUH)	Refrig. Chg. oz	V	HZ	Amps	Plug & Receptacle
		Overall		Inner		Cutout											
		A	B	C	D	E	F										
FC-4CP-03120-FA	3	26 (66)	41 ½ (105.4)	19 ⅜ (49.1)	37 ⅞ (96.2)	25¼ (64.3)	40 ¾ (103.5)	4⅛ (10.5) x 5 (12.7)	8x10 (20.3x 25.4)	112 (50)	1/3	4800	9	120	60	7.1	NEMA 5-15R
FC-4CP-03120-FA-FF	3																
FC-4CP-04120-FA	4		54¾ (139.2)		50 ½ (128.3)		54 (137)			138 (62.6)							
FC-4CP-04120-FA-FF	4																

Vollrath® Drop-Ins are made to order and cannot be returned. The installer must ensure cut-outs on new installations are correct, or retrofit installation dimensions match with Vollrath product dimensions. Vollrath does not guarantee that our models retrofit with competitive models (as competitive specifications can change without notice). We recommend countertop cut-outs be made after receipt of the Vollrath drop-in to ensure proper fit prior to cutting countertops. Do NOT modify the cord or plug. Modification may damage the drop-in or cause injury, and will void the warranty.
Well cutout must have a ⅞" (2.2 cm) corner radius.

VOLLRATH

The Vollrath Company, L.L.C.
1236 North 18th Street
Sheboygan, WI 53081-3201 U.S.A.
Main Tel: 800.624.2051 or 920.457.4851
Main Fax: 800.752.5620 or 920.459.6573
Customer Service: 800.628.0830
Canada Customer Service: 800.695.8560

Technical Services
techservicereps@vollrathco.com
Induction: 800.825.6036
Countertop Warming: 800.354.1970
Other Products: 800.628.0832

© 2026 The Vollrath Company L.L.C.