CARTRIDGE, WEQ-SCALE-PRO.X

Height: 8.44" (21.4cm) Width: 2.25" (5.7cm) Depth: 2.25" (5.7cm)

- Reduces lime scale formation from hard water in applications where water is either heated or evaporated
- Extends the life and increases efficiency of coffee brewers, ice machines, and steamers
- Engineered force-feeding orifice accurately controls feed rate without overdosing
- ¾" NPT stainless steel connections easily adapt to most plumbing systems
- Working flow rate of up to 10 GPM (37.8 lpm) accommodates most high volume foodservice environments
- FDA-CFR and NSF compliant materials
- Recommended for use in combination with WEQ (non-L) Systems

NOTE: Do not use with water that is microbiologically unsafe or of unknown quality without adequate disinfection before or after the system.

Specifications

Product #: 56000.0120

Cartridge Type: Quick Change

Application(s): Steamers, Ice, Coffee

Replacement Cartridge:

Filtration Type: Lime Inhibitor

Filter Change Frequency: Every 6 months

Capacity

Micron Rating	Service Flow Rate	Water Filter Capacity *Chlorine Reduction*	Water Filter Capacity *Chloramine Reduction*	Water Filter Capacity *Softening*
0.0	10.0 gal/min (37.9 L/min)	-	-	- -

Plumbing Requirements

Inlet Connection	Outlet Connection	Min Operating Pressure	Max Operating Pressure	Min Operating Temperature	Max Operating Temperature
		20 psi (138 kPa)	125 psi (862 kPa)	40°F(4°C)	100°F(38°C)

⚠ **WARNING:**

BUNN® reserves the right to change specifications and product design without notice. Such revisions do not entitle the buyer to corresponding changes, improvements, additions or replacements for previously purchased equipment. For most current specifications and other info visit bunn.com.

Last Updated: 07/22/2021

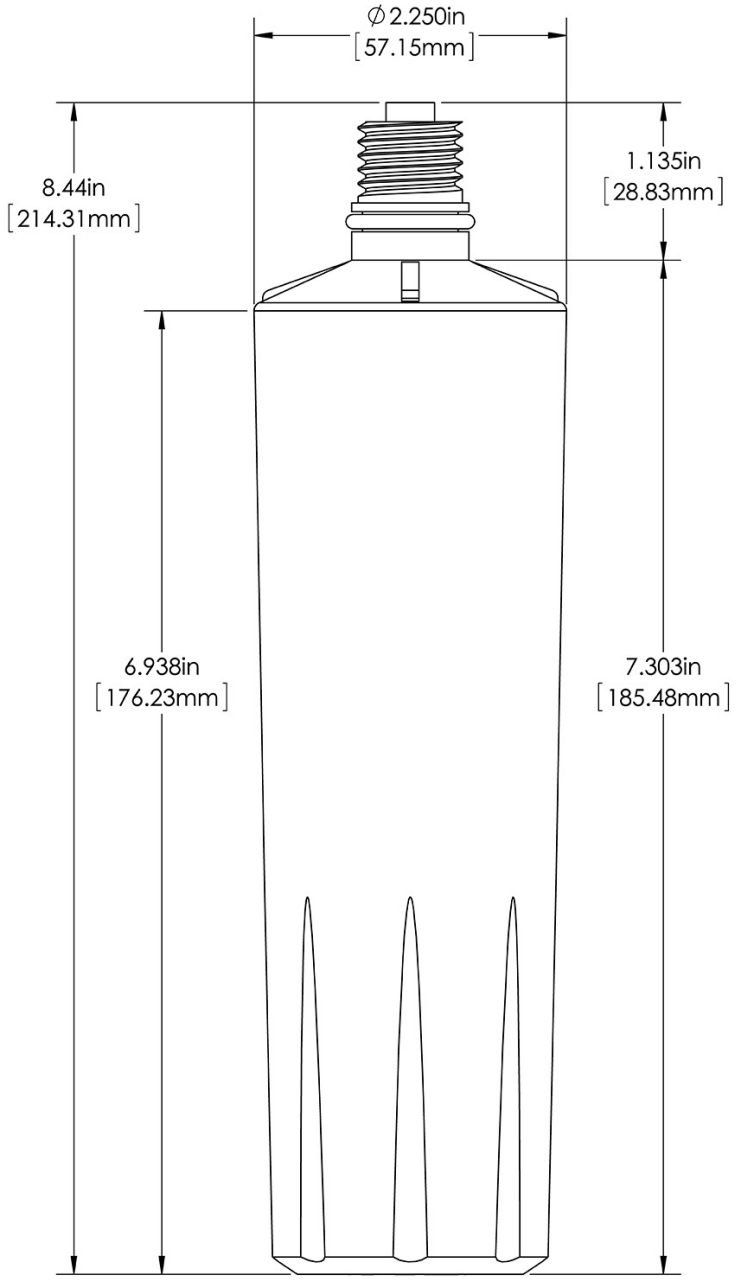

	Dimensions of Filter System *(filter head with filter cartridge)*			Installed Dimensions *(Installation with wall mounting)*			Cartridge Dimensions *(filter cartridge only)*		
	Height	**Width**	**Depth**	**Height**	**Width**	**Depth**	**Height**	**Width**	**Depth**
English	-	-	-	-	-	-	8.44 in.	2.25 in.	2.25 in.
Metric	-	-	-	-	-	-	21.4 cm	5.7 cm	5.7 cm

	Weight		Shipping				
	Dry	**Wet**	**Height**	**Width**	**Depth**	**Weight**	**Volume**
English	0.0 lbs	0.0 lbs	2.75 in.	2.75 in.	9.00 in.	1.000 lbs	-
Metric	-	-	7.0 cm	7.0 cm	22.9 cm	0.454 kgs	-

WARRANTY: BUNN High Performance Water Filtration Solutions Systems by BUNN® (excluding water filters and water treatment replacement cartridges) are covered by a limited warranty against defects in material and workmanship for a period of five years after date of purchase, under normal use and service, and when installed in accordance with manufacturer's recommendations outlined in the filtration systems owner's manual. BUNN replaceable elements (water treatment cartridges, filter elements, and feeder elements) are covered by a limited warranty against defects in material and workmanship for a period of one year after date of purchase or the remainder of the original warranty, whichever is longer. See printed warranty for full details. BUNN will provide a copy of the warranty upon request.

BUNN® reserves the right to change specifications and product design without notice. Such revisions do not entitle the buyer to corresponding changes, improvements, additions or replacements for previously purchased equipment.

For most current specifications and other info visit bunn.com.

Last Updated: 07/22/2021

Related Products & Accessories: CARTRIDGE, WEQ-SCALE-PRO.X(56000.0120)

SYSTEM, WEQ-SCALE-PRO.X

Product #: 56000.0033

FILTER HEAD, WEQ-SCALE-PRO.X

Product #: 56000.0038

BUNN® reserves the right to change specifications and product design without notice. Such revisions do not entitle the buyer to corresponding changes, improvements, additions or replacements for previously purchased equipment. For most current specifications and other info visit bunn.com.

Model Compatibility: CARTRIDGE, WEQ-SCALE-PRO.X(56000.0120)

Serving and Holding selections are currently unavailable. Please contact your sales representative to find out more information.

BUNN® reserves the right to change specifications and product design without notice. Such revisions do not entitle the buyer to corresponding changes, improvements, additions or replacements for previously purchased equipment. For most current specifications and other info visit bunn.com.