REVISION HISTORY				
REV	DESCRIPTION	MODIFIED	DATE	ECO
A		FA\HR048	2023/11/28	

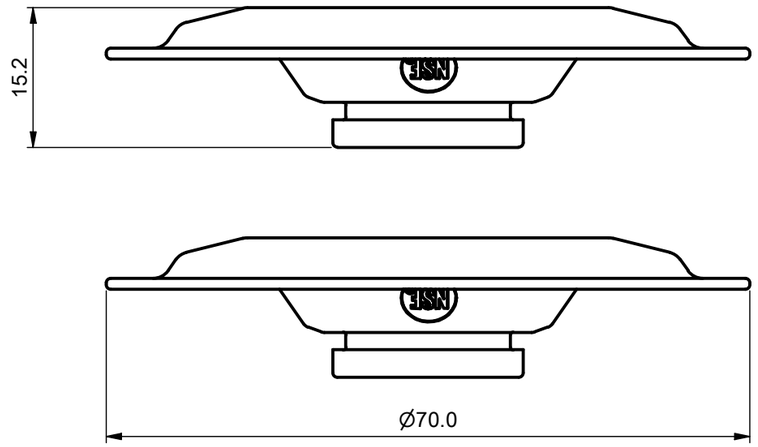

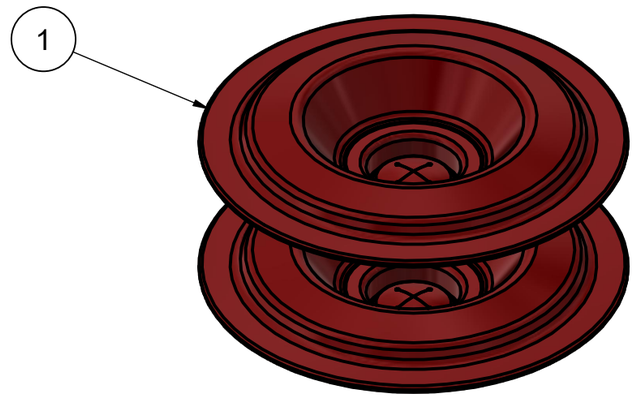

NOTES(技术说明):
1) Remove any flash (去除披锋);
2) Any obvious molding defect is not allowed (不允许有明显的成型缺陷);
3) Other requirements please refer to signed sample (其它要求请参照封样);
4) Certification and regulation: (认证及安规:);
5) Mass: 0.013 kg (重量为0.013 kg).

UNSTATED TOLERANCES								
LINEAR: (DIN ISO 2768 T1)						ANGULAR (DIN 6935)		
>	⩽	F (FINE)	M (MEDIUM)	C (COARSE)	V (VERY COARSE)	>	<	
0.5	3	± 0.05	± 0.1	± 0.2	N/A			
3	6	± 0.05	± 0.1	± 0.3	± 0.5			
6	30	± 0.1	± 0.2	± 0.5	± 1.0	0°	30°	± 2°
30	120	± 0.15	± 0.3	± 0.8	± 1.5	30°	50°	± 1°45'
120	400	± 0.2	± 0.5	± 1.2	± 2.5	50°	80°	± 1°30'
400	1000	± 0.3	± 0.8	± 2.0	± 4.0	80°	120°	± 1°15'
1000	2000	± 0.5	± 1.2	± 3.0	± 6.0	120°		± 2°

ITEM	QTY	PART NUMBER	TITLE	MATERIAL	Deburr
1	2	27811054	Valve, Silicone, Single Hole, Red	Silicone	N/A

Parts List

TITLE
Valve, Silicone, Single Hole, Red pack of 2

FRANKE

Franke Asia Sourcing

These drawings and specifications are the property of Franke Technology and Trademark Ltd. and shall not be reproduced, copied or transfered to any third party without the prior written permission of Franke Technology and Trademark Ltd., Hergiswil, Switzerland

TOLERANCES	DEBURR	SUB-TITLE
X AND X.X 1 mm ANGLES ±1 DEG OR AS NOTED	N/A	

SCALE	MATERIAL	REGION	REV	ITEM NUMBER
AS NOTED		America	A	27811055

UNIT	FORMAT	THICKNESS	ROTATION
mm	A3	0	unrestricted

SHEET 1 OF 1