PARTS LIST			
ITEM	QTY	PART NUMBER	DESCRIPTION
1	1	304893-001	SHIELD (Z6900-VG)
2	1	G68021	Z6900-VG HARDWARE BAG ASSEMBLY

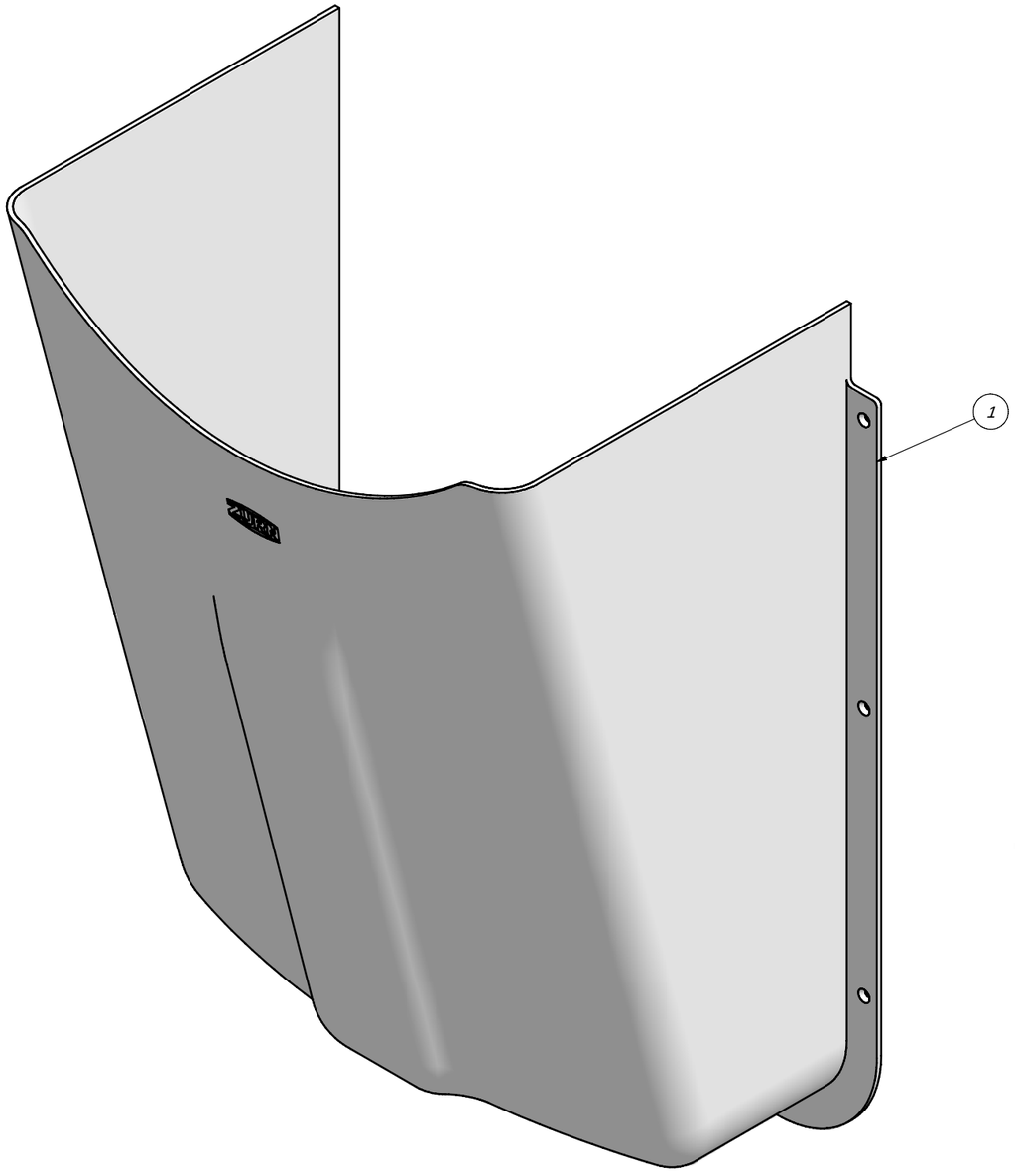

INSTALLATION INSTRUCTIONS:

1. PLACE 4 LAV SHIELDS (ITEMS #1) IN INDIVIDUAL POLYBAGS.
2. STACK 4 POLYBAGGED LAV SHIELDS (ITEMS #1) IN CARDBOARD BOX.
3. PLACE 4 POLYBAGGED HARDWARE ASSEMBLIES (ITEMS #2) WITH INSTALLATION INSTRUCTIONS IN BOX WITH BAGGED LAV SHIELDS.
4. PLACE Z6900-VG LABEL ON BOX AS SHOWN BELOW.

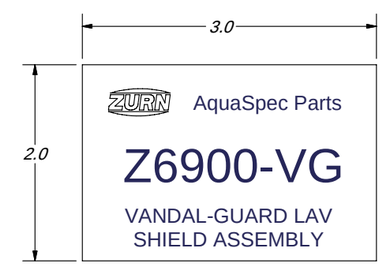

IMPORTANT. This print is the property of Zurn Industries, LLC, and is loaned for mutual assistance. This drawing contains proprietary and trade secret information and intelletual property rights. As such, it has been submitted to you in confidence for a specific purpose and may only be used for that specific purpose and it is subject to recall at any time and is not to be forwarded to other parties nor reprinted in any form without our permission.

Property of Zurn Industries, LLC, Erie, PA

UNLESS OTHERWISE SPECIFIED DRAWING TOLERANCES

Decimal		Fractional	Casting
.X	= ± .1	± .010 to 2	± 1/32 to 2
.XX	= ± .02	± 1/64 2 to 10	± 1/16 2 to 10
.XXX	= ± .005	± 1/32 over 10	± 1/8 over 10

POLISH ∠ - ANGLE ± 0° 30'
Ø - DIAMETER ◎ - CRITICAL DIMENSION
* - UNIFORM MATERIAL THICKNESS UNLESS OTHERWISE SPECIFIED

ALL DIMENSIONS IN INCHES - DO NOT SCALE DWG. - BREAK ALL SHARP EDGES

PRODUCT NO.

REF.	DR. BY	CK. BY	APPROVED	DATE	SCALE	SIZE
C.N. NO. 127593	MM	JRG	JRG	4/20/2011	NTS	C

SUPERSEDES -

LAV SHIELD ASSEMBLY

© 2011 BY ZURN INDUSTRIES, LLC

ZURN INDUSTRIES, LLC
ERIE, PA. U.S.A. 16514

PLUMBING PRODUCTS GROUP
COMMERCIAL BRASS OPERATION
FALCONER, NY 14733

DWG NO. Z6900-VG SHEET 1 OF 1 REV.