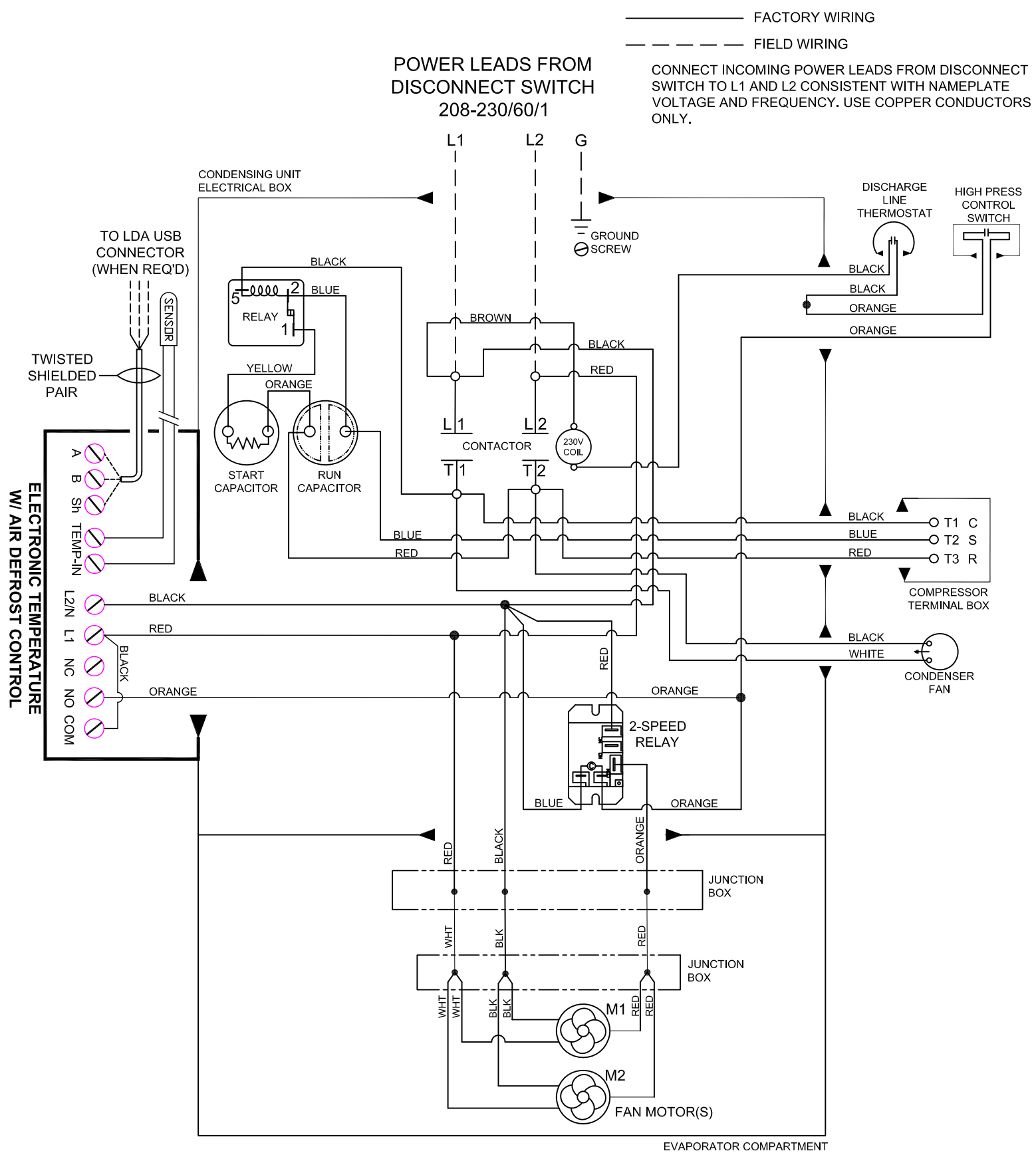

WIRING DIAGRAM 115/1/60

NOTE: SYSTEM IS SUPPLIED WITH A HOT GAS CONDENSATE PAN. A CONDENSATE DRAIN LINE IS NOT REQUIRED.

NOTE: 18" CLEARANCE REQUIRED ON ALL SIDES FOR PROPER OPERATION OF POLAR PAK SYSTEMS.

ITEMS PROVIDED INCLUDE:

1. Liquid Line Filter/Driers
2. Electronic Temp Control (Installed)
3. Expansion Valve (Installed)
4. Scroll Compressor-Copeland
5. High Pressure Switch
6. Fan Motors-208-230/1/60

CONFORMS TO ANSI/UL STD 427

CERTIFIED TO CAN/CSA STD C22.2 NO.120-04

Intertek 40807

THIS DRAWING/FILE IS THE PROPERTY OF KOLPAK AND IS STORED IN AN ELECTRONIC DATA BASE. ANY ALTERATIONS OR ADDITIONS MUST BE APPROVED BY KOLPAK ENGINEERING AND CHANGED IN DATA BASE.

SIGNED APPROVED PRINT MUST BE REC'D. B/4 FAB.

☐ APPROVED AS DRAWN
☐ APPROVED AS NOTED
☐ REVISE AND RESUBMIT

SIGNED _____

DATE _____

KOLPAK
A Welbilt Brand
2915 Tennessee Avenue North, Parsons, TN 38363
(731) 847-6361*(800) 826-7036*

REFRIGERATING UNIT – COOLER

MODEL	PC078T3			3/4	HP
VOLTS	208-230	PH 1	CYCLES	60	
REFRIGERANT	R448A	28 OZ.		6,280	BTUH
TOTAL LOAD	7.8	AMPS	TOTAL HEAT REJECTED	9,545	BTUH
MIN.CIRCUIT AMPACITY	9.3		EVAP. FAN	0.6	AMPS EA.
MAX.EXTERNAL FUSE SIZE	15		EVAP. FAN	38W	HP
COMP. RLA	6.0		DEFROST		AMPS
COMP. LRA	35.7		COND. FAN	0.6	AMPS
			COND. FAN	38W	HP
HIGH SIDE DESIGN PRESS.	450	PSIG	LOW SIDE DESIGN PRESS.	174	PSIG

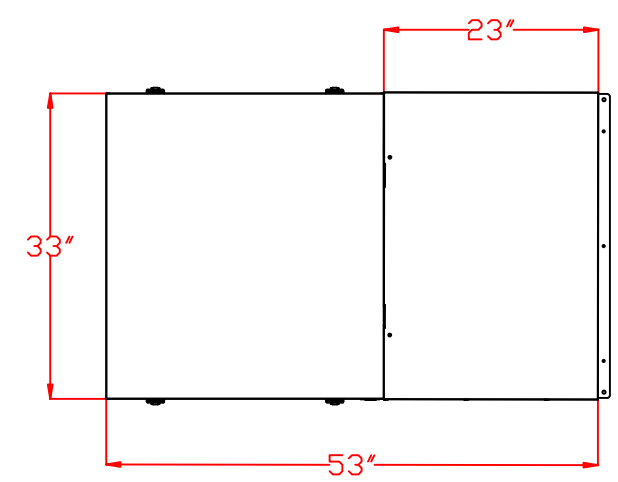

TOP VIEW

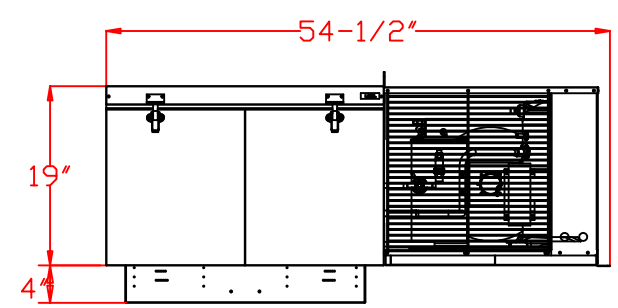

FRONT VIEW

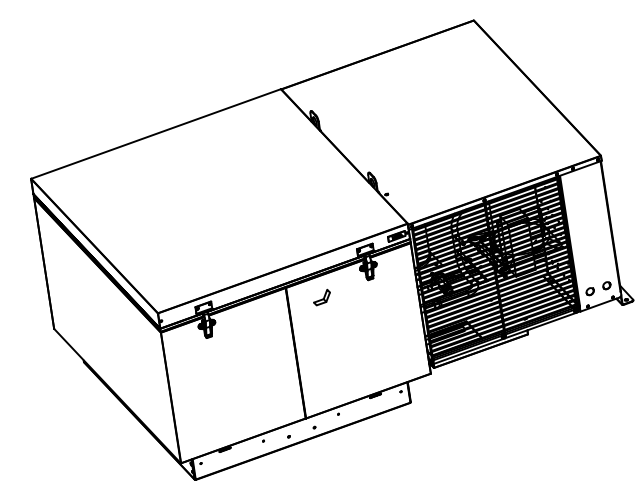

PC078T3 (208-230/1/60)

SCALE: NONE	DEALER:	DRAWN BY: DJW
DATE: 11.22.2019		REVISED
KOLPAK A Welbilt Brand		KOLPAK QUOTE NO:
		DRAWING NUMBER PC078T3