TOP

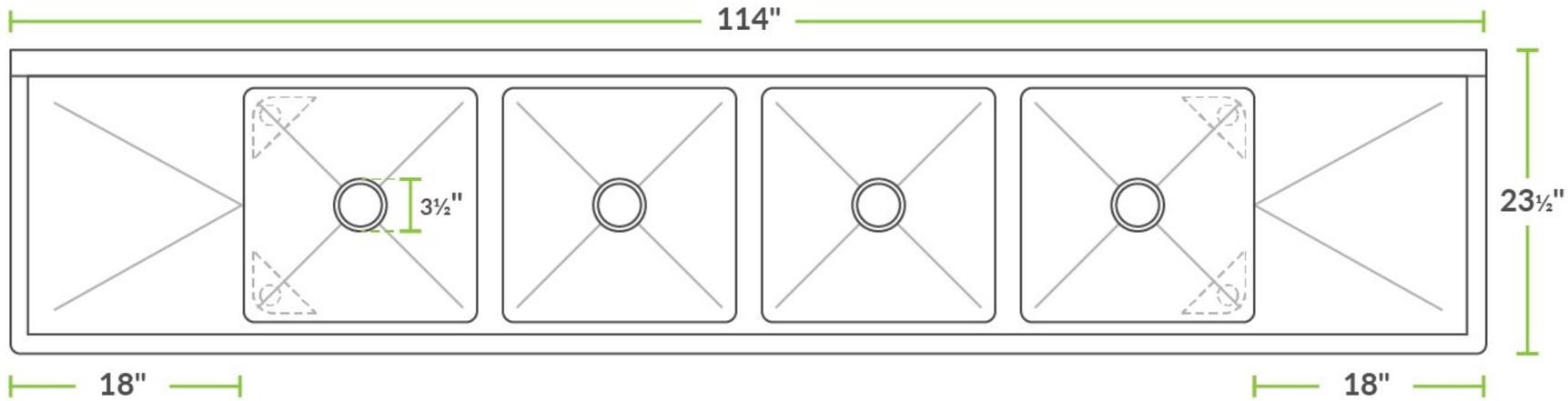

SIDE

FRONT