VLPF

2 Lower Warmers

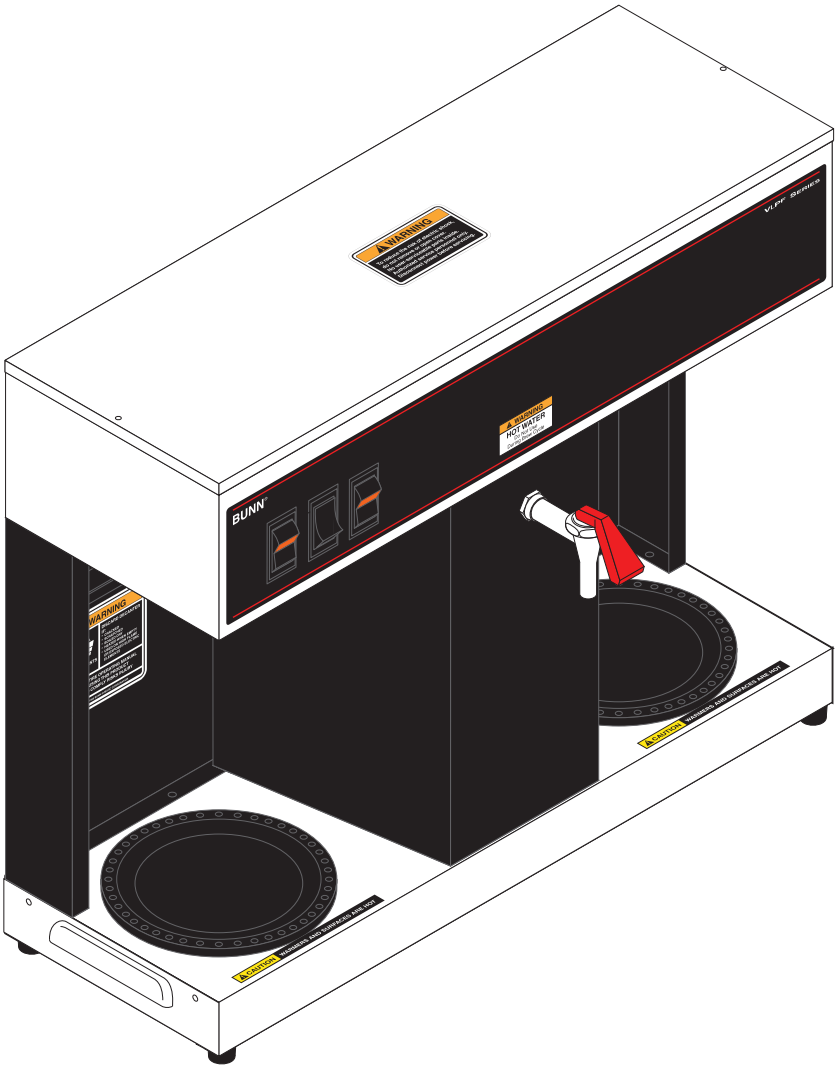

ILLUSTRATED PARTS CATALOG

Designs, materials, weights, specifications, and dimensions for equipment or replacement parts are subject to change without notice.

BUNN
5020 Ash Grove Drive, Springfield, Illinois USA 62711
Phone (217) 529-6601, Technical Support Phone (800) 420-2866
www.bunn.com

32262.0000 H 08/26 © 1994 - 2026 BUNN Commercial LP

BUNN COMMERCIAL PRODUCT WARRANTY

Warranty statements and information can be found on our website. Please visit **https://commercial.bunn.com/support/warranty-lookup** for further details.

TABLE OF CONTENTS

Housing & Covers 4
Tank & Components 6
Strainer/Flow Control, Inlet Valve & Faucet 8
Electrical & Operating Controls 12
Warmer Assemblies 14
Funnels & Basket 16

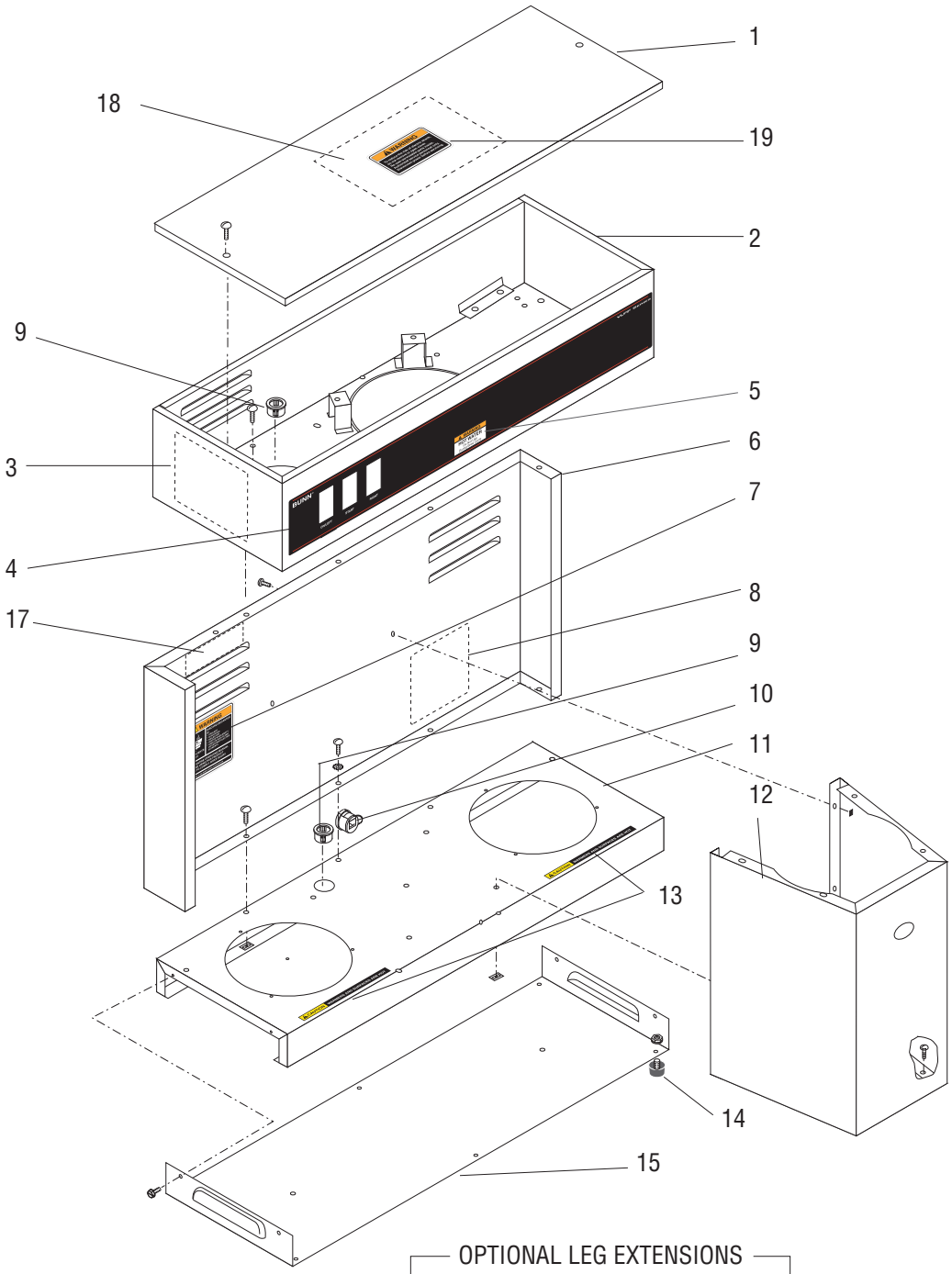

OPTIONAL LEG EXTENSIONS

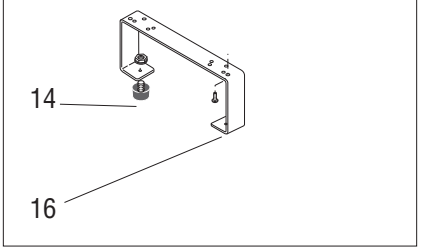

P1957.42.5

HOUSING & COVERS

ITEM	PART NO.	QTY.	DESCRIPTION
1	07408.0000	1	Cover, Top
	01303.0000	2	Screw, PNH Sltd, SST 4-40 x .50"
2	07406.1000	1	Housing , Hood(Includes items 3 thru 5)
	01311.0000	9	Screw, Truss Head (SST) 8-32 x .25"
	00978.0000	8	Fastener, Flat Type (SST) 8-32
	00970.0000	1	Nut, Keps - SST 8-32
3	10178.0000	1	Schematic, Elec 120V VLPF
4	22124.0000	1	Decal, Control Panel
5	42878.0000	1	Decal, Warning Hot Water (FCT)
6	25154.0001	1	Panel W/Decals, Trunk Rear - BLK (Includes items 7 & 8)(Also order Item 17)
	01311.0000	5	Screw, Truss Head (SST) 8-32 x .25"
	00978.0000	4	Fastener, Flat Type (SST) 8-32
	00908.0000	1	Nut, Hex - SST 8-32.
7	00658.0000	1	Decal, Caution - Decanter/Funnel
8	00831.0000	1	Decal, Warning - Electrical
9	01663.0000	2	Bushing, Snap - .875" Dia.
10	01686.0000	1	Bushing, Strain Relief - Nylon
11	04273.1000	1	Housing, Base(Includes item 13)
12	37454.0001	1	Housing, Trunk Front (BLK)
	01311.0000	6	Screw, Truss Head (SST) 8-32 x .25"
	00916.0000	6	Fastener, J-Type 4-40.025 Gap
13	12364.0000	2	Decal, Caution - Warmers are Hot
14	04198.0001	1	Foot, Kit Blk SBR - .75" OD x .48" HT #6 (Set of 4)
15	04203.0000	1	Cover, Base
	02332.0002	6	Screw, Hex-Crimptite 6-32 x .38"
16	02776.0000	2	Leg Extensions - 3.5" HT (Optional)
	02332.0002	4	Screw, Hex-Crimptite 6-32 x .38"
17	00656.0001	1	Decal, Comply to Plumbing Code
18	32540.0000	1	Decal, Timer Adjustment
19	37881.0000	1	Decal, No Serviceable Parts

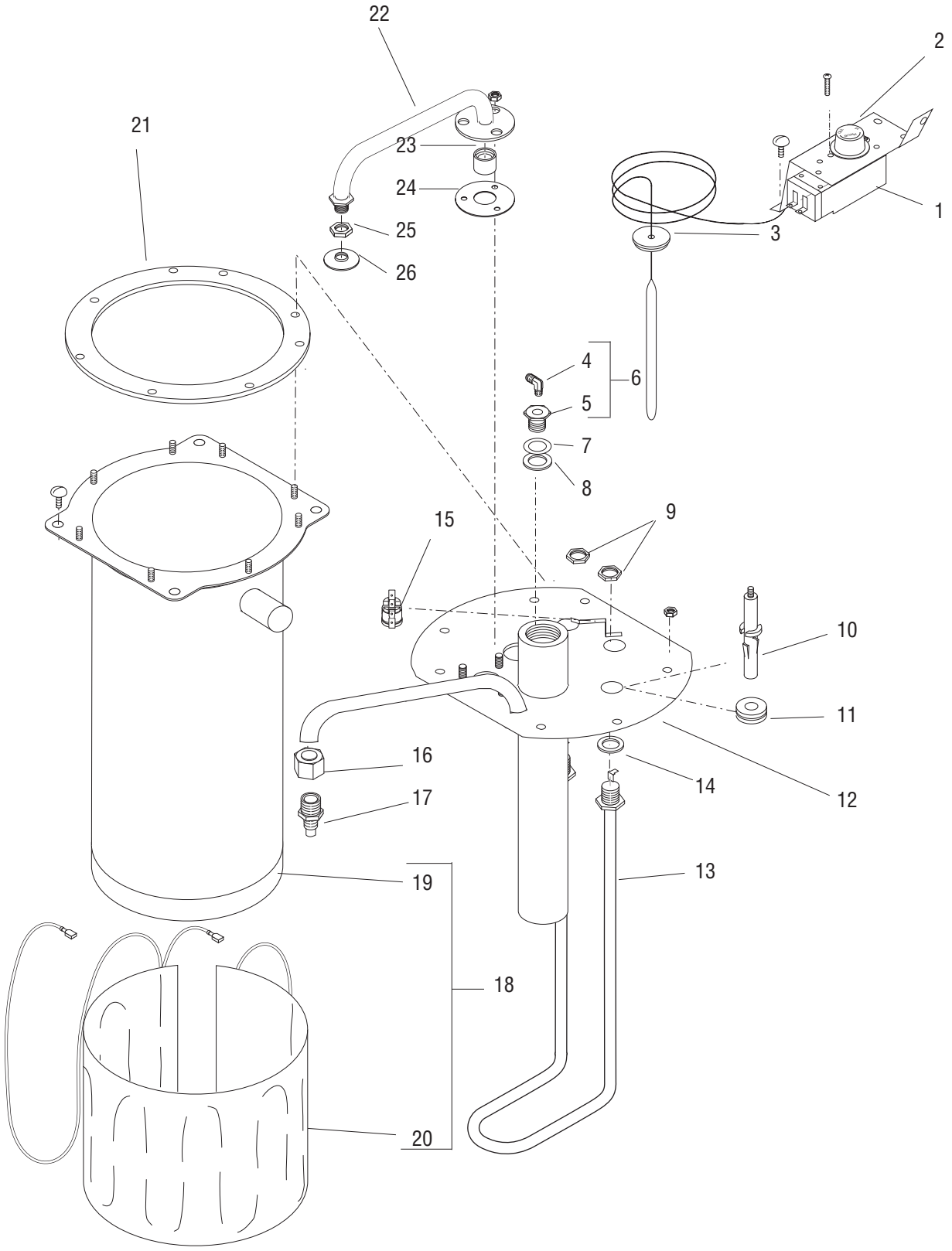

P1964

TANK & COMPONENTS

ITEM	PART NO.	QTY.	DESCRIPTION
-	07409.0000	1	Tank Assy, 1320 Watt 120V (Includes items 6-16, 18-21 and 26)
	01315.0000	2	Screw, Truss Head (SST) 8-32 x.38"
1	04314.0001	1	Thermostat Kit (Includes items 2 & 3)
	20762.0000	2	Screw, Binding Head 8-32 x .25" (Terminal Screws)
2	00720.0000	1	Knob, Thermostat
3	07073.1000	1	Grommet, Thermostat
4	00400.0001	1	Elbow, Male - TNPL .25" FLR x .12MPT
5	00948.0000	1	Fitting Inlet .750-16 x .125" FPT
6	00460.0000	1	Fitting Assy, Tank Inlet (Includes items 4 & 5)
7	01540.0000	1	Washer, SST - .750" ID x 1.0" OD x .01
8	01201.0000	1	Gasket, Tank Inlet -Silicone
9	00942.0000	2	Nut, Hex - Brass .50" -20
10	07412.1000	1	Probe Kit, Liquid Level
	01501.0000	1	Washer
	20203.0100	1	Lockwasher #8
	00908.0000	1	Nut #8-32
11	02536.0000	1	Grommet, Silicone
12	07435.0000	1	Tank Lid Assy, W/intake tube (See Tank & Components- Later Style, Item 12)
	00908.0000	8	Nut, Hex 8-32
13	04236.1000	1	Tank Heater Kit 1320W 120V (Includes item 14)
14	00943.0000	2	Gasket, Tank Heater
15	29329.1000	1	Thermostat, Limit - 230F - 17A
16	00929.0001	1	Nut/Sleeve
17	07401.0000	1	Fitting, Air Vent
18	07431.0000	1	Tank w/Blanket Warmer 120V (Includes items 18 & 19)
19	07432.0000	1	Tank (12.25" HT W/Fct Ftg)
20	04260.0000	1	Blanket Warmer, 50W 120V
21	04221.0000	1	Gasket, Tank Lid
22	05555.0002	1	Sprayhead Tube Kit (See Tank & Components - Later Style, Item 24)
	00908.0000	3	Nut, Hex 8-32
23	05518.0000	1	Hub, Syphon
24	05515.0000	1	Gasket, Sprayhead Tube
25	01075.0000	1	Nut, Hex .438" - 20
26	01082.0000	1	Sprayhead, 6-Hole
	01082.0005	1	Sprayhead, 5-Hole (Optional)
	01082.0006	1	Sprayhead, 1-Hole (Optional-Pouch Pack)
	Note: The following items are not illustrated		
27	21016.0008	1	Lead, Elec - Blk 4" Limit Thermo to Tank Heater

(continued)

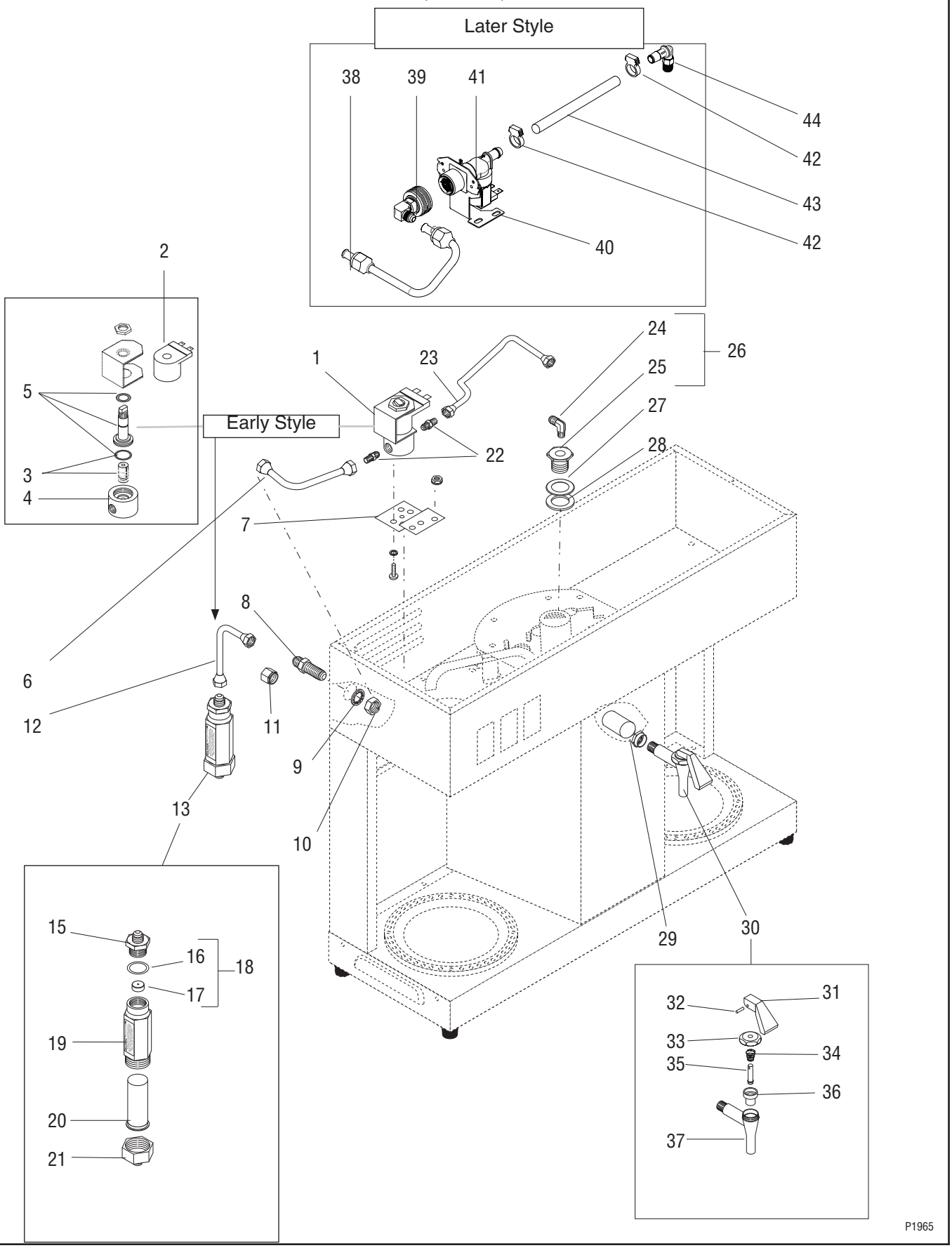
Later Style
38
39
41
44
42
43
42
40
2
5
3
4
Early Style
1
23
24
25
26
27
28
22
7
8
6
12
11
9
10
13
15
16
18
17
19
20
21
29
30
31
32
33
34
35
36
37
P1965

STRAINER/FLOW CONTROL, INLET VALVE & FAUCET

ITEM	PART NO.	QTY.	DESCRIPTION
1	01085.0002	1	Solenoid, 120V 1" Dia. Coil (Includes items 2 thru 5)
	01327.0000	2	Screw #10-32 x .375"
	01502.0000	2	Lockwasher #10
2	28480.0000	1	Coil 120V
3	01111.0002	1	Solenoid Valve Repair Kit 120V
4	28479.0000	1	Base Kit (Includes O-Ring)
5	28481.0000	1	Guide Kit 120V (Includes Washer and O-Ring)
6	00310.0000	1	Tube Assy (Solenoid to Bulkhead)
7	07441.0000	1	Bracket, Solenoid/Relay Mtg
	00970.0000	2	Nut, Keps #8-32 Zinc Pl
8	00459.0000	1	Fitting, Bulkhead .25" FLR
9	01532.0000	1	Lockwasher, Internal Tooth .438"
10	00463.0000	1	Nut, Brass .438"-20
11	00935.0000	1	Cap, Brass .25" FLR (For shipping purposes only)
12	00310.0000	1	Tube Assy (Bulkhead to Strainer/Flow Control)
13	22300.0175	1	Strainer/Flow Control Assy (.175 GPM)(Includes items 15 thru 21)
14	24356.0175	1	Str/Flow Comb w/Tbg (.175 GPM) (Includes items 12 & 13)
15	01154.0000	1	Fitting, Flow Control Outlet
16	01155.0000	1	Gasket, Flow Control
17	----------	1	Washer, Flow Control (Order item 18)
18	20526.1175	1	Washer/Gasket Assy (Includes items 16 & 17)
19	----------	1	Body (Order item 13)
20	23721.0000	1	Screen
21	22249.0000	1	Fitting, Flow Control Inlet
22	00402.0001	2	Connector .25" FLR x .125" MPT
23	07442.0000	1	Tube Assy, Solenoid to Tank
	24684.0000	2	Gasket, .25" flare copper
24	00400.0001	1	Elbow, Male - TNPL .25" FLR x.125" MPT (Early Style)
	58424.0000	1	Elbow, 1/8-27 NPT X 3/8 Barb KYNAR (Later Style)
25	00948.0000	1	Fitting Inlet .750-16 x .125" FPT
26	----------	1	
27	01540.0000	1	Washer, SST - .750" ID x 1.0" OD x .01
28	01201.0000	1	Gasket, Tank Inlet -Silicone

(continued)

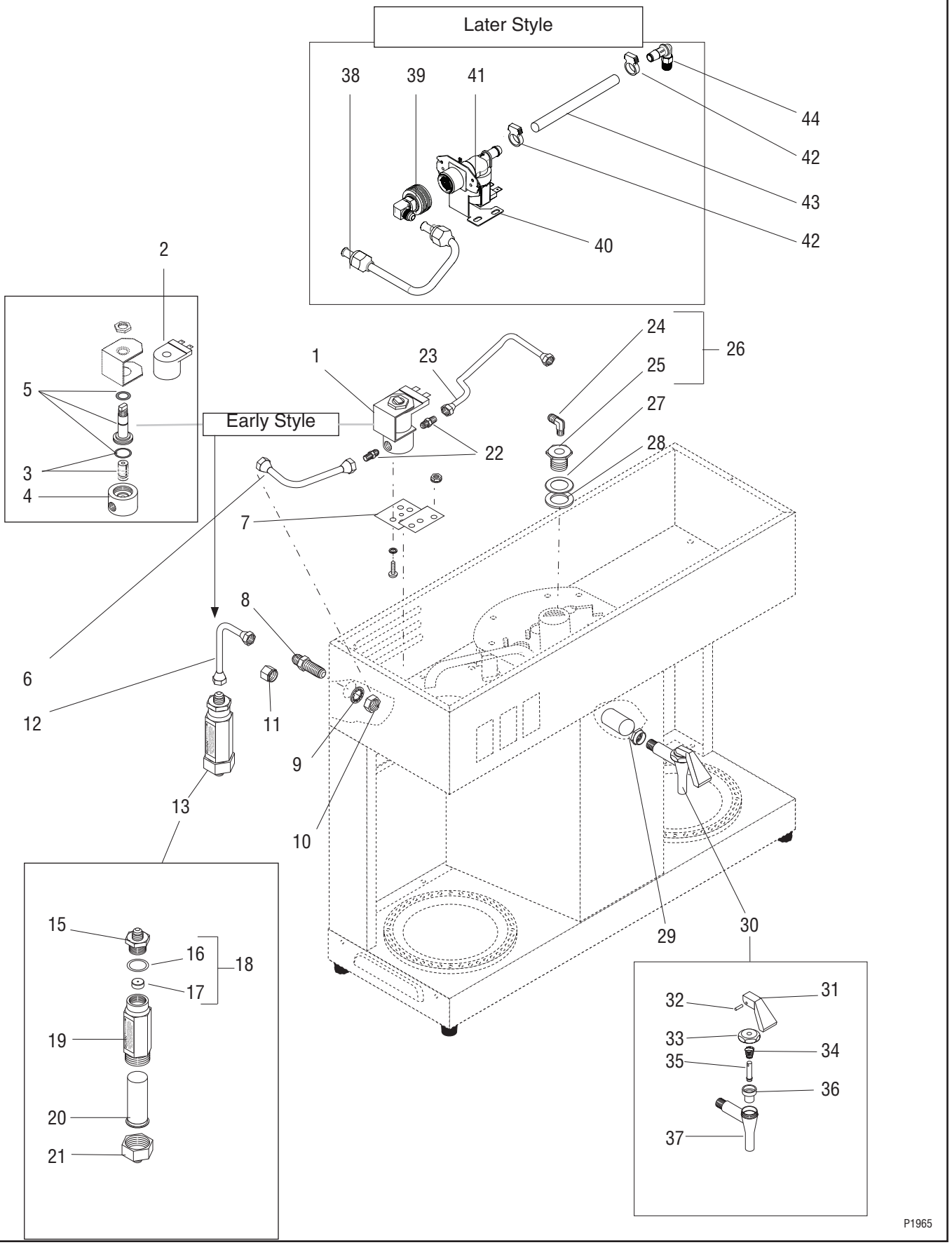
Later Style
38
39
41
44
42
43
42
40
2
5
3
4
Early Style
1
23
24
25
26
27
28
22
7
8
6
12
11
9
10
13
15
16
18
17
19
20
21
29
30
31
32
33
34
35
36
37
P1965

STRAINER/FLOW CONTROL, INLET VALVE & FAUCET

ITEM	PART NO.	QTY.	DESCRIPTION
29	02850.0000	1	Nut, Faucet Jam .50"-20 UNF
30	02596.1000	1	Faucet Assy (Includes items 31 thru 37)
31	02601.0000	1	Handle, Red
32	02858.0000	1	Pin
33	02854.0000	1	Nut, Bonnet
34	02595.0000	1	Spring
35	13054.0000	1	Stem
36	02766.0000	1	Faucet, Seat Cup
37	----------	1	Body (Order item 30)
38	00310.0022	1	Tube Assy, Cop .25FLR
39	37297.0006	1	Fitting, .25 FLR X.75 Hose Thd
40	58349.0000	1	Bracket, Solenoid - VLPF
41	40693.0011	1	Inlet Valve Assy, 120V .175GPM Flow Control
42	12422.0001	2	Clamp, Hose-Snap Type .59/.66ID
43	----------	1	Tube, Silicone.375 x .625 x 6.00 (Order item 47)
44	58424.0000	1	Elbow, 1/8-27 NPT X 3/8 Barb KYNAR
45	02594.0000	-	Faucet Stem W/Pin (Includes items 32 and 35)
46	28706.0000	-	Faucet Repair Kit (Includes items 31,32 and 34 thru 36)

Note: The following items are not illustrated

47	20976.1000	-	Tube, Silicone -.375ID x 12.0"LG
	20976.1001	-	Tube, Silicone -.375ID x 36.0"LG
	20976.1002	-	Tube, Silicone -.375ID x 120.0"LG

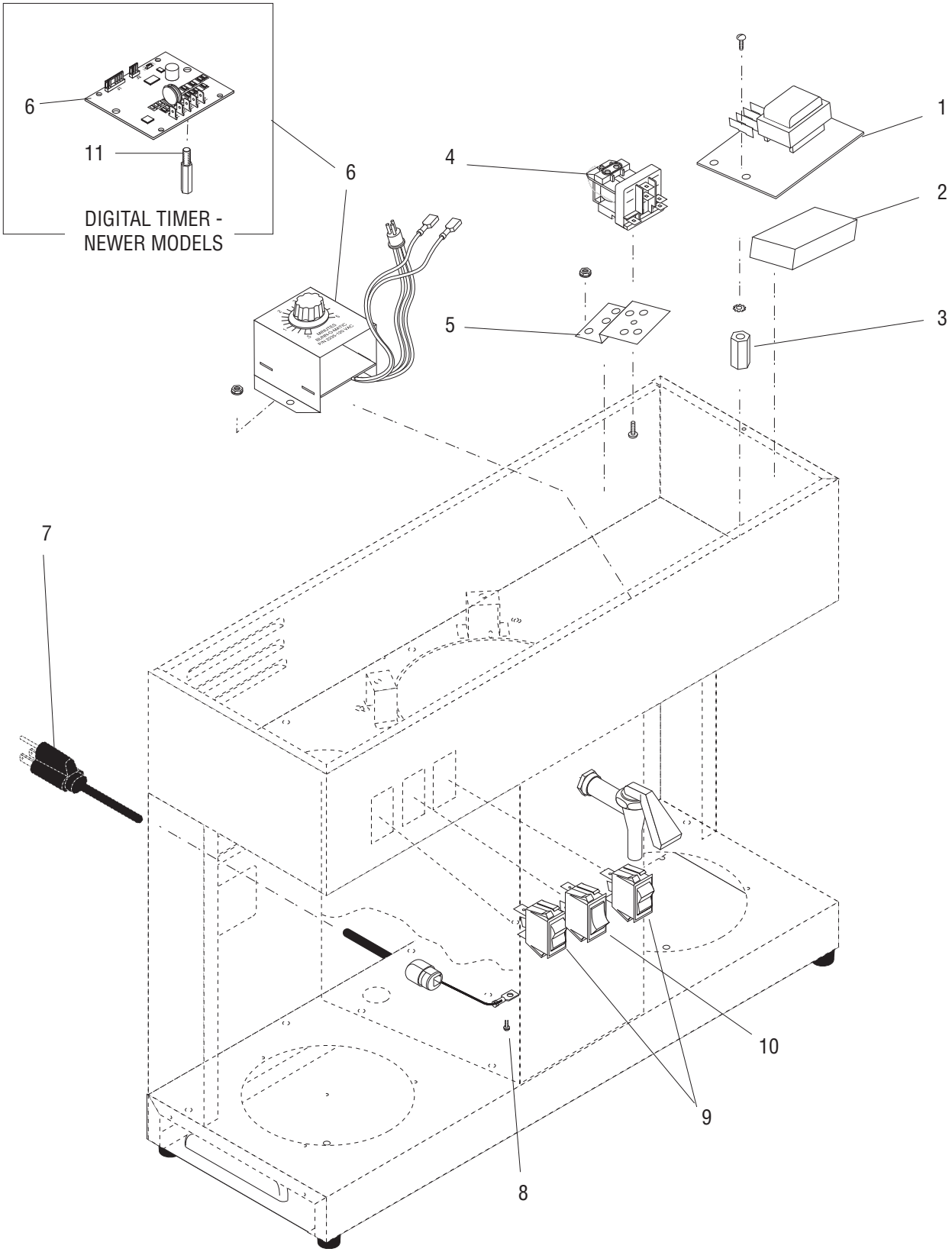

P1976

ELECTRICAL & OPERATING CONTROLS

ITEM	PART NO.	QTY.	DESCRIPTION
1	07074.1030	1	Control Board, Level 120V 5 sec
	01311.0000	2	Screw, Truss Head #8-32 x .25"
	01511.0000	2	Lock Washer, Ext T - #8- Zinc. Pl
2	03263.0000	1	Pad, Sponge, ADH Back .5" x 2.0" x 2.0"
3	00950.0000	2	Spacer, Hex Nut 8-32 x .75" HT
4	02618.1000	1	Relay, 120V SPDT
	01347.0000	1	Screw, TRH Serr SST 6-32 x .38"
5	07441.0000	1	Backet, Solenoid/Relay MTG
	00970.0000	2	Nut, Keps #8-32 Zinc Pl
6	32400.0002	1	Timer, Digital - 120V (Late Models)
	- - - - - - - -	1	Timer, 5 Min - 120V - N.O. (Early Models, Order Item 17)
	00970.0000	2	Nut, Keps #8-32 Zinc Pl
7	01637.0000	1	Cord, Pwr - 16/3 HSJO 5-15P 60"
8	02337.0001	1	Screw #10-32 x .375"
9	02753.0000	2	Switch, On/Off - Light - Amber 120V
10	02628.0000	1	Switch, Mom-Start SPST N.O.
11	23825.0000	2	Spacer

Note: The following items are not illustrated

12	34951.0000	1	Wiring Harness, 120V
13	21016.0030	1	Lead, Elec - BLK 4" (Control Therm to Power Cord)
14	21016.0031	1	Lead, Elec - BLU/BLK 4" (Control Therm to Limit Therm)
15	07014.0000	2	Terminal Housing .25" Recpt
16	29445.0000	1	Wiring Harness, Digital Timer (Early Models with Digital Timers)
17	32400.0000	1	Digital Timer Replacement Kit (Includes Items 6, 11, 12 & 17) (used to replace old style timers)
18	06064.0000	1	Label, Power Cord Warning

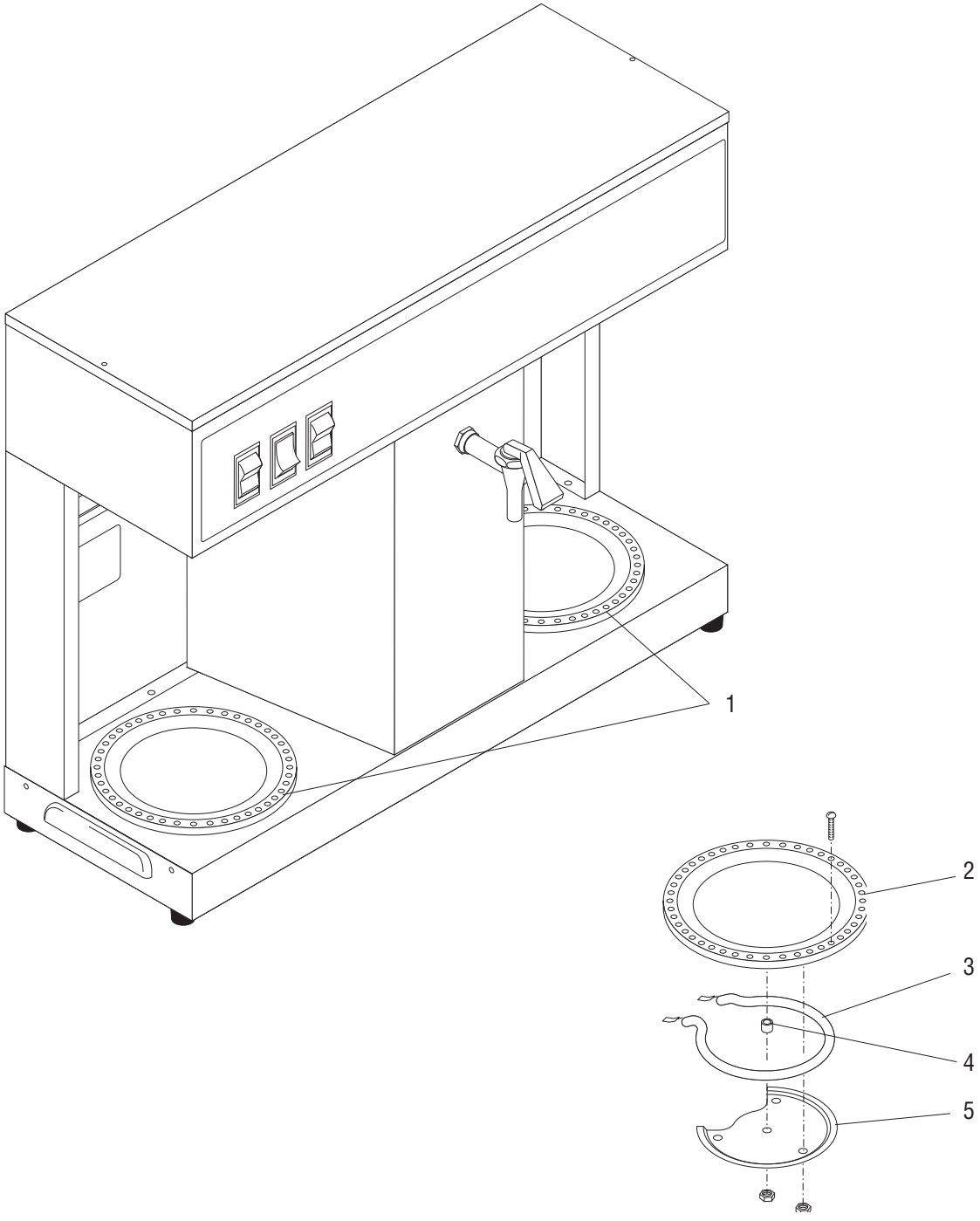

P1974

WARMER ASSEMBLIES

ITEM	PART NO.	QTY.	DESCRIPTION
1	03652.0000	2	Warmer Assy, 100W 120V (Includes items 2 thru 5)
	01303.0000	6	Screw #4-40 x .50"
	00916.0000	6	Fastener, "J" Type #4-40
2	03656.0000	1	Dish
3	01227.0000	1	Warmer Element, 100W 120V
4	13042.0001	1	Spacer
5	05212.0000	1	Plate
	00970.0000	2	Nut, Keps #8-32

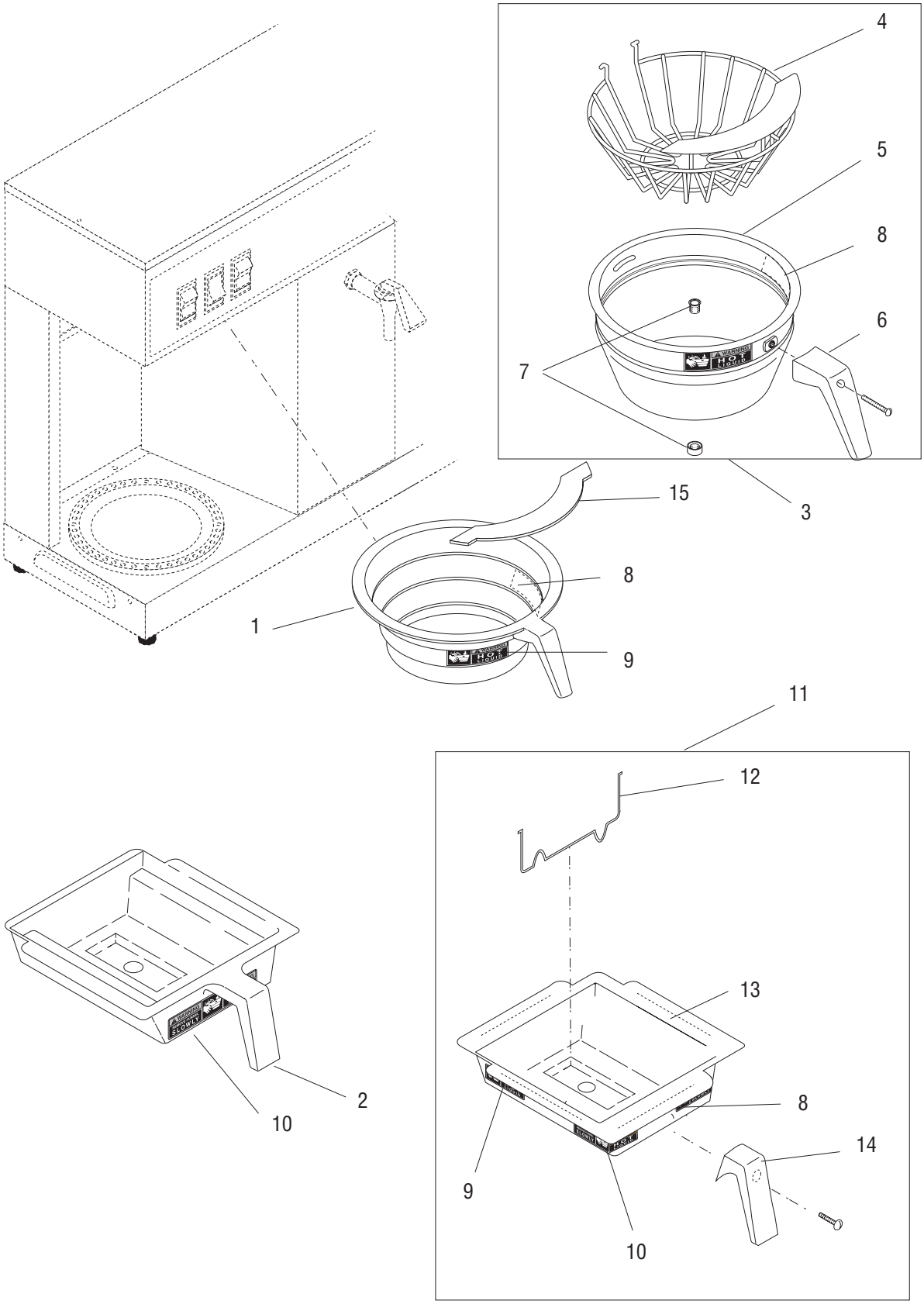

P1975.85

FUNNELS & BASKET

ITEM	PART NO.	QTY.	DESCRIPTION
1	20583.0003	1	Funnel W/Decals, Plastic - Blk (Includes items 8, 9 & 15)
	20583.0006	1	Funnel W/Decals, Plastic - Orn (Includes items 8, 9 & 15
2	02774.0001	1	Funnel W/Decals, Pouch Pack - Blk (Small)(Includes item 10)
	04274.0002	1	Funnel W/Decals, Pouch Pack - Blk (Large)(Includes item 10)
3	20216.0000	1	Funnel, SST W/Black Handle (7.125" Dia.)(Includes items 4 thru 9)
	20216.0001	1	Funnel, SST W/Orange Handle (7.125" Dia.)(Includes items 4 thru 9)
4	33088.0000	1	Filter Basket
5	28553.0000	1	Funnel, SST (Includes items 8 & 9)
6	20244.1000	1	Handle, Black (Includes screw)
	20244.1001	1	Handle, Orange (Includes screw)
	01331.0002	1	Screw, RDH LKG Patch #10-32
7	01031.0000	1	Funnel Tip Kit
8	03408.0002	1	Decal, Warning - Remove Funnel
9	03409.0002	1	Decal, Warning - Hot Liquid
10	28694.0000	1	Decal, Warning - Hot Liquid/Remove Funnel
11	29151.0000	1	Funnel Assy, SST - Pouch Pack Blk Handle(Includes items 8-10 & 12-14)
12	29845.0000	1	Insert, Pouch Pack Funnel - wireform
13	----------	1	Funnel (order item 11)
14	29152.1000	1	Funnel Handle Kit, SST Pouch Pack Blk (Includes screw)
	29152.1001	1	Funnel Handle Kit, SST Pouch Pack Orn (Includes screw)
	01331.0002	1	Screw, RDH LKG Patch #10-32
15	32964.0000	1	Splash Guard