A simple act of kindness can make a huge impact.

The **Share Cart** was designed to facilitate giving to those in need. K-12 Schools, Universities, Hospitals, Care Centers and more are utilizing the **Share Cart** to provide essential items such as drinks, snacks, books, condiments, hygiene items and blankets for students, patients, residents and guests

The powder coated finish is aesthetically pleasing and easy to keep clean and sanitize. Comes with HACCP compliant cold food pan drop-ins to keep items cold without the mess of ice.

- ✓ **Two Locations for Signage.**
  Add a logo, mascot or sponsors for a personal touch.
- ✓ **Keeps Cold Items Cold.**
  Top shelf designed to hold HACCP compliant cold food pan drop-ins (pans included).
- ✓ **Push Handle.**
  Easy maneuvering down halls.
- ✓ **Slanted Second Shelf.**
  Enhances product visibility and grab-and-go convenience.
- ✓ **Reinforced Base.**
  Provides added miscellaneous storage.

52861GREEN

INCLUDES HACCP compliant cold food pans.

OPTIONAL Cold Pan Shelf (#52918BLUE)

OPTIONAL Solid Shelf (#529190RANGE)

NEWAGE INDUSTRIAL

NewAgeIndustrial.com | Made in the USA

RED

ORANGE

YELLOW

GREEN

BLUE

PURPLE

BLACK

52861

Model No.	Size D - H - L	Ship Lbs.
52861*	23 ¼" x 70" x 32 ¼"	85
Unit Without Top / Signage Header		
52861NT*	23 ¼" x 34" x 32 ¼"	80

* Must select color option.

Four 5" plate type casters, two swivel, two swivel with brake.
All welded aluminum construction.
HACCP compliant cold food pans included.

Note: Poly food boxes, custom signs and any other accessories are not included and must be purchased by end user.

Options Sold Separately: Must select color.

☐ **52918 - Cold Pan Shelf -**
Hinged, drop-down shelf built to hold ⅓-size cold pan.

☐ **52919 - Computer/Tablet Shelf.. -**
Hinged, drop down shelf for a computer/tablet.

- **Color options:**
  - **Red -** Add "RED" suffix to model #.
  - **Orange -** Add "ORANGE" suffix to model #.
  - **Yellow -** Add "YELLOW" suffix to model #.
  - **Green -** Add "GREEN" suffix to model #.
  - **Blue -** Add "BLUE" suffix to model #.
  - **Purple -** Add "PURPLE" suffix to model #.
  - **Black -** Add "BLACK" suffix to model #.

52861NTBLUE

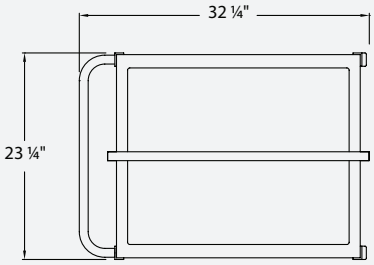

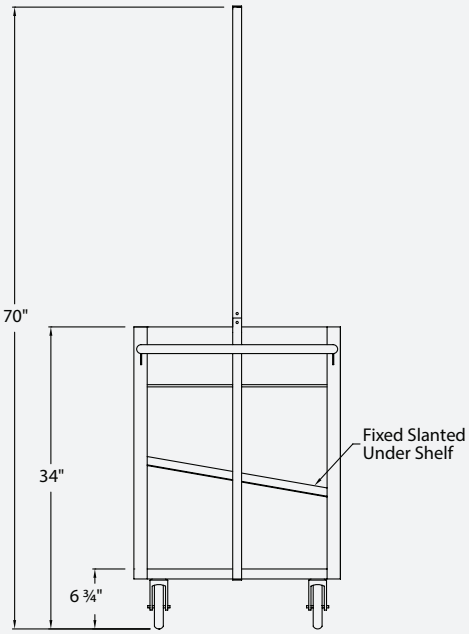

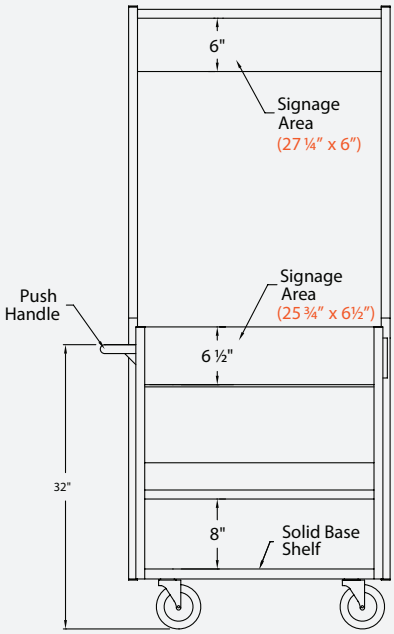

NEWAGE INDUSTRIAL

NewAgeIndustrial.com | Made in the USA

Note: Poly food boxes, custom signage and any other accessories are not included and must be purchased by end user.