CREDENZA SHELL
Armazón de credencia
Armature de crédence

ALE-VA256024

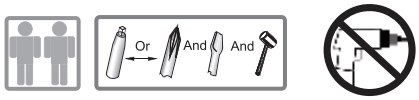

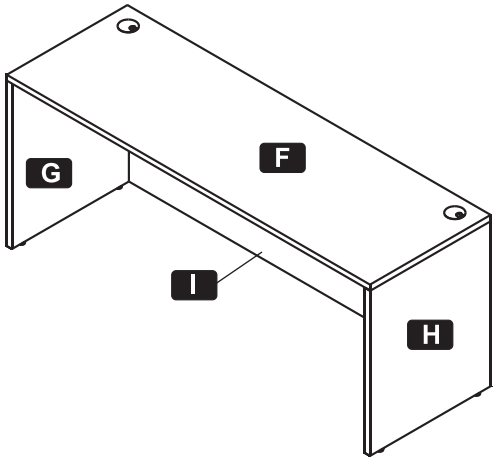

Important:

DO NOT USE POWER TOOLS TO ASSEMBLE YOUR FURNITURE.
POWER TOOLS MAY STRIP OR DAMAGE THE PARTS.

CLEANING AND CARE OF YOUR FURNITURE

This furniture is manufactured with a high quality melamine laminate finish. It is highly resistant to common hazards such as scratches, peeling, dents, moisture and heat. During the manufacturing process some glue residue may be left on the panels. This is normal, and this residue can be easily removed with a soft cloth moistened with isopropyl (rubbing alcohol). For regular maintenance of your furniture use a soft cloth with a mild cleaning solution. Never use abrasives or harsh chemicals.

Importante:

NO USE HERRAMIENTAS ELECTRICAS PARA MONTAR SUS MUEBELS.
HERRAMIENTAS ELECTRICAS SE PUEDEN DAÑAR O ESTROPEAR LOS COMPONENTS.

Limpieza y cuidado de su mueble

Este mueble está hecho con madera laminada de alta calidad. Es totalmente resistente a rayones, golpes, humedad y calor. Durante el proceso de fabricación podrían quedar pequeños restos de pegamento en los paneles. Estos residuos son facilmente removibles con un paño suave humectado con alcohol. Para el mantenimiento regular de este mueble, use un paño suave con una solucion no agresiva. Nunca utilice productos quimicos fuertes ni abrasivos.

Nettoyage et entretien de vos meubles

Ce meuble est construit avec un fini de mélamine de haute qualité. Ce fini est très résistant au égratignures, écaillements, bosselures, l'humidité et la chaleur. Au cours du procédé de fabrication des résidues de colle peuvent avoir été laissés sur les panneaux. Cela est normal, et le résidue de colle peut être facilement nettoyé avec un linge imbibé de isopropylique (alcool à friction). Pour l'entretien régulier de votre meuble, utilisez un chiffon doux avec un détergent doux. N'utilisez jamais d'abrasif ni de produits chimiques corrosifs.

PART Pieza pièce	QTY . Cant. qté.	ITEM Descripcion article
A	11	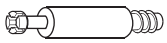
B	11	
C	11	
D	10	
E	4	
	1	Touch-up crayon Hides minor scratches or imperfections

PART Pieza pièce	QTY. Cant. qté.	ITEM Descripcion article
F	1	TOP PANEL panel superior panneau supérieur
G	1	LEFT SIDE PANEL panel lateral izquierdo panneau latéral gauche
H	1	RIGHT SIDE PANEL panel lateral derecho panneau latéral droit
I	1	BACK PANEL panel posterior panneau arrière
J	8	
K	2	

Product support and parts:
Ayuda del producto y partes: 1-800-733-4000
Support technique et pièces:

10-015/5C

Manufactured for/ Hecho para/ Fabriqué pour Alera ®/ Essendant Co.
One Parkway North, Deerfield, IL 60015 ©2015 Essendant Co.
Made in / Hecho en / Fabriqué en China

1

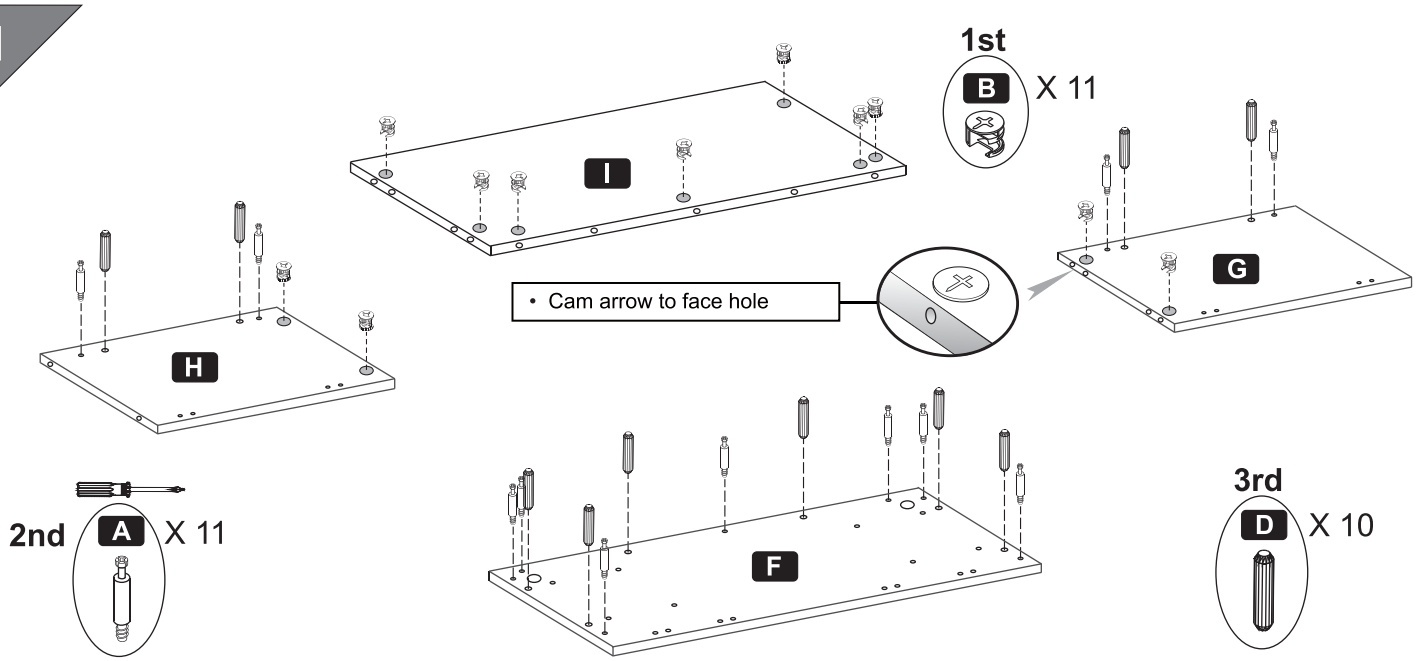
1st
B
X 11
I
G
H
• Cam arrow to face hole
2nd
A
X 11
F
3rd
D
X 10

2

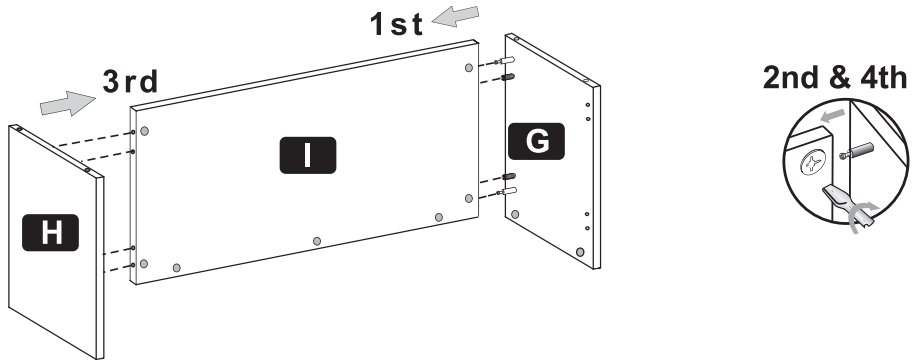
1st
3rd
I
G
H
2nd & 4th

3

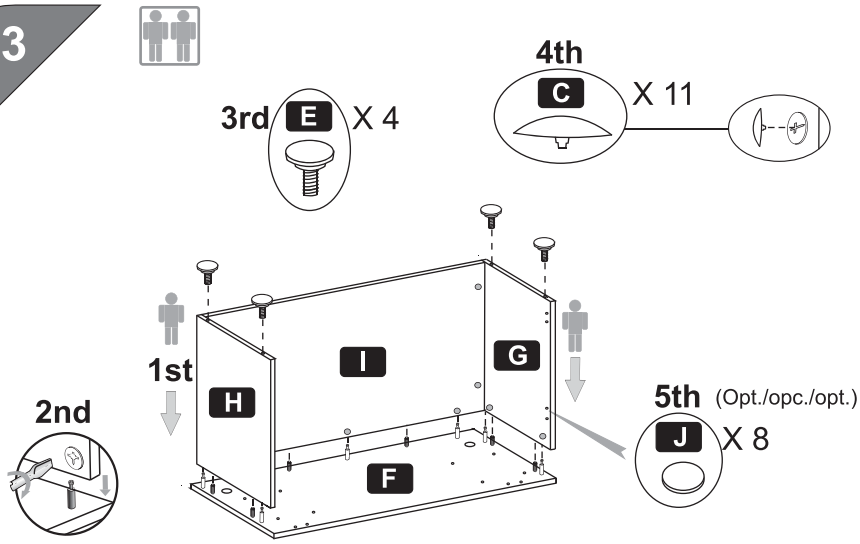
4th
C
X 11
3rd
E
X 4
1st
H
I
G
F
2nd
5th
(Opt./opc./opt.)
J
X 8

4

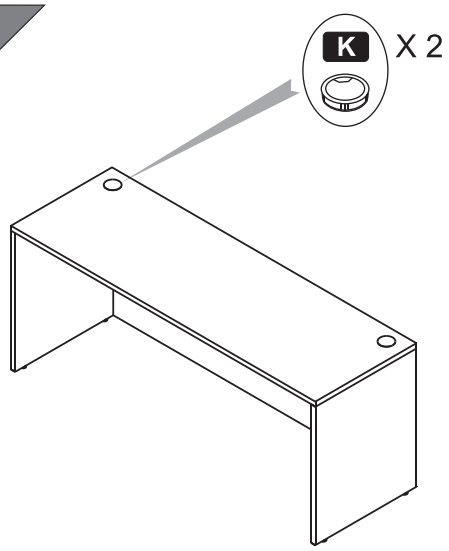
K
X 2

LIMITED 5-YEAR WARRANTY

Except as otherwise provided within this Limited Warranty, Essendant Co. (Essendant) will repair or replace any Alera® and other Essendant branded furniture products, component or part that is found by to be defective in material or workmanship within five (5) years from the date of original purchase so long as you, the original purchaser, still own it. This is your sole and exclusive remedy. This limited warranty is subject to the provisions below. It applies to products sold within the United States of America and the Commonwealth of Canada.

Limitations:

- Fabric, vinyl and/or leather is warranted for two (2) years from the date of original purchase of the chair by the original owner of the Alera® product in question.

Exclusions:

This warranty does not apply and no other warranty applies to:

- Normal wear and tear, which are to be expected over the course of ownership
- Modifications or attachments to the product that are not approved by Essendant
- Products that were not installed, used or routinely and properly maintained in accordance with product instructions and warnings
- Products used for rental purposes

Color variations in fabrics and finishes:

Essendant does not warrant the color-fastness or matching of colors, grains or textures of covering materials.

TO THE EXTENT ALLOWED BY LAW, ESSENDANT DISCLAIMS ALL OTHER WARRANTIES, EITHER EXPRESS OR IMPLIED, INCLUDING ANY WARRANTY OF MERCHANTABILITY OR FITNESS FOR A PARTICULAR PURPOSE. ESSENDANT WILL NOT BE LIABLE FOR ANY CONSEQUENTIAL OR INCIDENTAL DAMAGES.

Notice to Purchasers for home or personal use:

Federal law does not permit the exclusion of certain implied warranties for consumer products. Therefore, if you are purchasing this product for home or personal use, the exclusion of implied warranties noted in the above paragraph may not apply to you. Some states do not allow the exclusion or limitation of incidental or consequential damages, so the above limitation or exclusion may not apply to you. This warranty gives you specific legal rights, and you may also have other rights which vary from state to state.

To obtain service under this warranty:

Your Alera® Reseller will work with Essendant in supporting your warranty requests. Please note: Written authorization of Essendant must be obtained before any warranty work is performed. To obtain authorization and to ensure the best level of customer service, please take the following steps:

1. If a defect is discovered, please contact the Reseller from whom the product was purchased within 30 days from the date of discovery. The Reseller will require information about the product such as: the SKU number, serial number and/or registration number or date of manufacture from the product in question and/or any original transaction documents affirming that you are the original purchaser of this product.
2. Following your claim, your Reseller will conduct an inspection and review. During this time your Reseller or their appointed servicing agent will gather information regarding the claim, inspect the product and contact an Essendant customer service representative. Please allow a reasonable amount of time for these activities.
3. A customer service representative or another representative of Essendant will determine whether to provide replacement parts, authorize repairs or replace the product providing Essendant affirms that the product in question is eligible under the conditions of the warranty as stated above.

15ALE-J/D

California 93120

Compliant for Formaldehyde Phase 2

The California Air Resources Board (CARB) approved an Airborne Toxic Control Measure (ATCM) to reduce formaldehyde emissions from composite wood products including hardwood, medium density fiberboard and particleboard. These finished goods are low in formaldehyde emissions and comply with the ATCM.

Manufactured for Alera®/Essendant Co.
One Parkway North, Deerfield, IL 60015

06-015/2