Infusion Series® Brewers

Faucet Kit Installation Instructions

TO BE PERFORMED BY QUALIFIED PERSONNEL

For technical assistance, please call BUNN at 1-800-286-6345

Purpose:

This kit provides the components to mount the Faucet Assembly in three different locations. The Faucet can be mounted in the Hood, or on either side of the trunk.

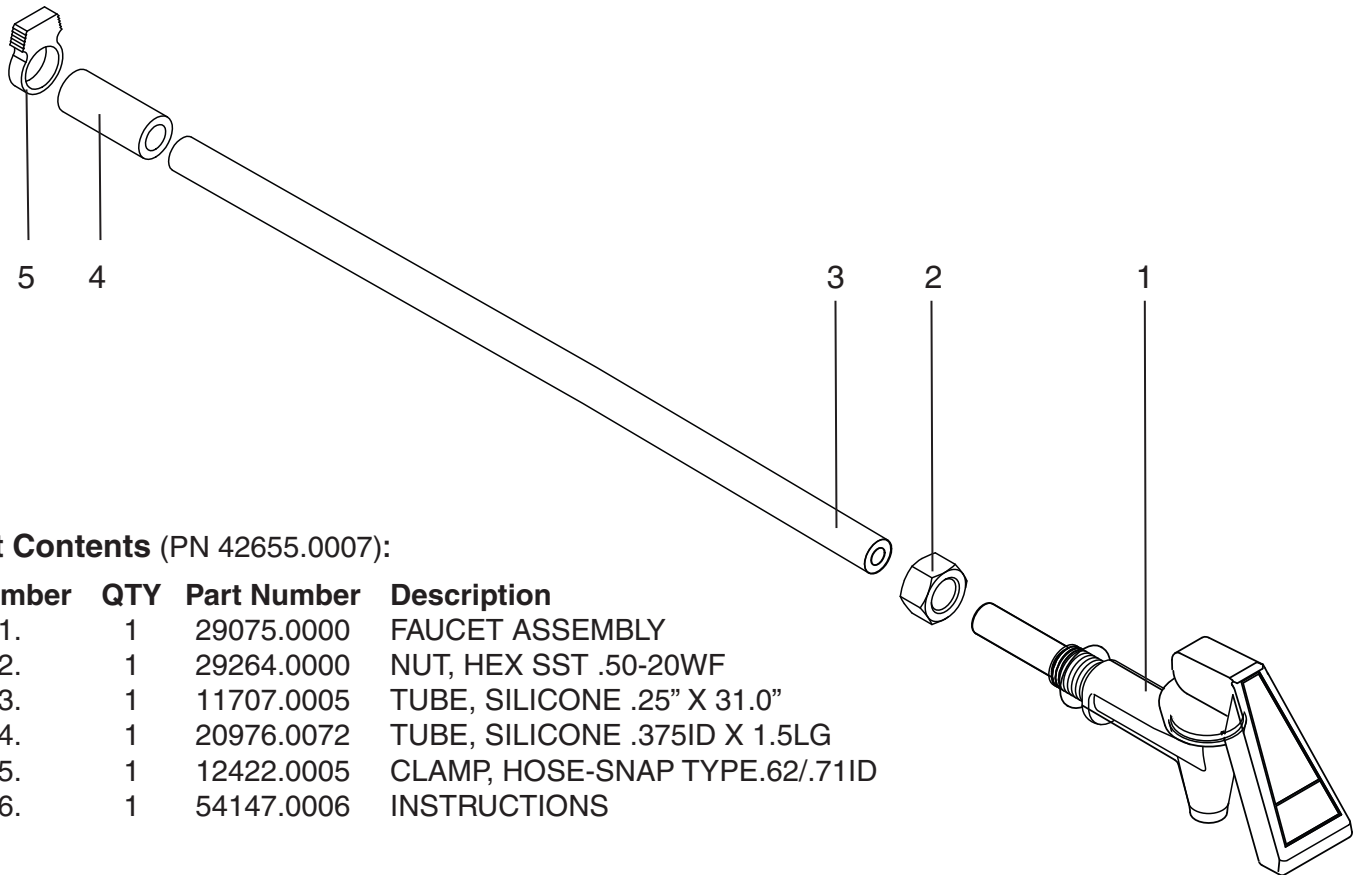

Kit Contents (PN 42655.0007)**:**

Number	QTY	Part Number	Description
1.	1	29075.0000	FAUCET ASSEMBLY
2.	1	29264.0000	NUT, HEX SST .50-20WF
3.	1	11707.0005	TUBE, SILICONE .25” X 31.0”
4.	1	20976.0072	TUBE, SILICONE .375ID X 1.5LG
5.	1	12422.0005	CLAMP, HOSE-SNAP TYPE.62/.71ID
6.	1	54147.0006	INSTRUCTIONS

INSTALL DETAIL

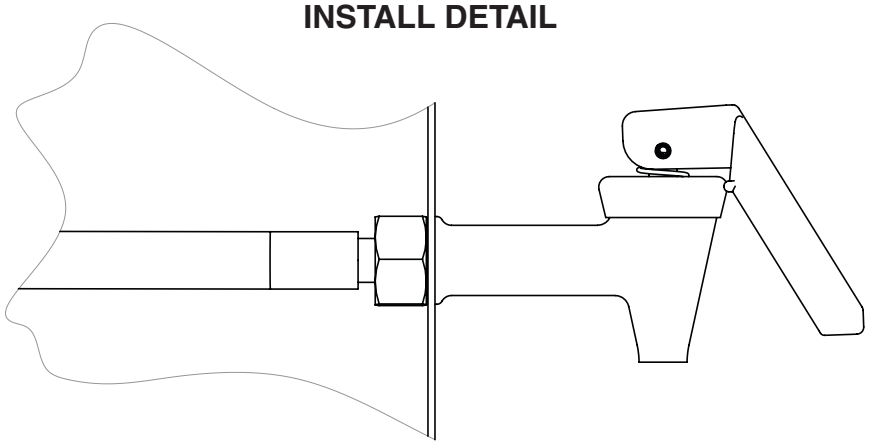

Fig. 1

Bunn-O-Matic Corporation

5020 Ash Grove Drive, Springfield, Illinois 62711 | Phone (217) 529-6601 | Fax (217) 529-6644 | **www.bunn.com**

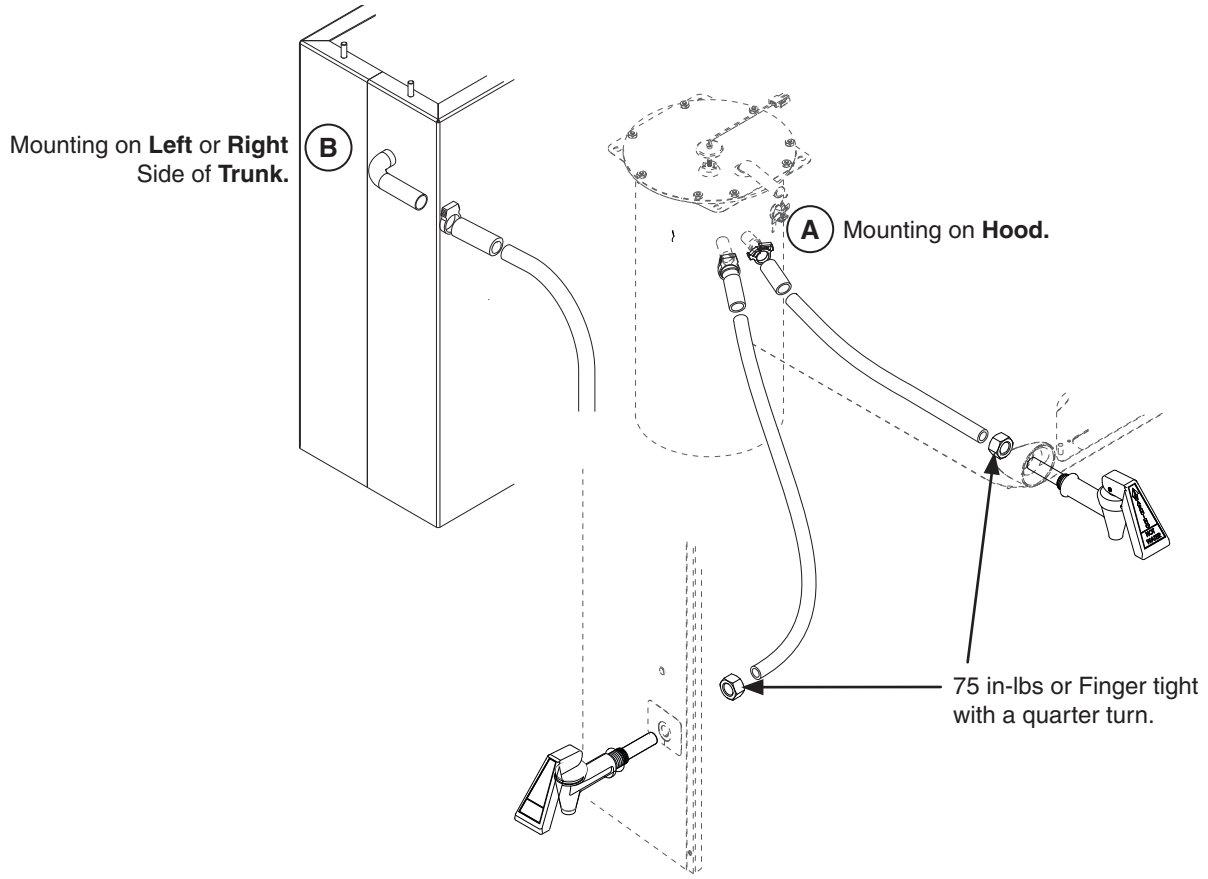

INSTRUCTIONS:

1. Disconnect power to the dispenser.
2. Remove four screws securing top cover.
3. Remove six screws securing front cover. (For lower install only)
4. Drain at least half of the water from the tank assembly.
5. Remove the clamp and tube cap from the tank assembly.

(A) HOOD MOUNTING:

1. Push the 1.50” tube over the fitting at tank and secure with clamp.
2. Insert 31.0” tube into 1.50” tube.
3. Remove the medalion from hood.
4. Place the faucet assembly into hood and secure with nut. (See Fig. 1)
5. Push a 1.50” tube over the shank.
6. Measure the hose from the tank so that there is no stretching or kinking of the hose, and trim the excess from the hose.

(B) TRUNK SIDE MOUNTING (Left or Right):

1. Push the 1.50” tube over the fitting at the tank. Secure with clamp.
2. Install 31.0” tube into 1.50” tube.
3. Remove the plug from trunk.
4. Place the faucet assembly into trunk and secure with nut. (See Fig. 1)
5. Position the hose from the tank so that there is no stretching or kinking of the hose.
6. Push a 1.50” tube over the shank.

   NOTE: If the faucet has been installed in the hood and hose was trimmed, the hose will no longer reach the side mounted faucet. A new hose must be ordered.
7. Replace the front and top covers and tighten screws.
8. Follow directions for filling the tank in the Operators manual.