RELIABILITY BUILT IN™

Limited One Year Warranty

T&S warrants to the original purchaser (other than for purposes of resale) that such product is free from defects in material and workmanship for a period of one (1) year from the date of purchase. During this one-year warranty period, if the product is found to be defective, T&S shall, at its options, repair and/or replace it. To obtain warranty service, products must be returned to…

T&S Brass and Bronze Works, Inc.
Attn: Warranty Repair Department
2 Saddleback Cove
Travelers Rest, SC 29690

Shipping, freight, insurance, and other transportation charges of the product to T&S and the return of repaired or replaced product to the purchaser are the responsibility of the purchaser. Repair and/or replacement shall be made within a reasonable time after receipt by T&S of the returned product. This warranty does not cover Items which have received secondary finishing or have been altered or modified after purchase, or for defects caused by physical abuse to or misuse of the product, or shipment of the products.

Any express warranty not provided herein, and any remedy for Breach of Contract which might arise, is hereby excluded and disclaimed. Any implied warranties of merchantability or fitness for a particular purpose are limited in duration to the warranty period provided on the product. Under no circumstances shall T&S be liable for loss of use or any special consequential costs, expenses or damages.

Some states do not allow limitations on how long and implied warranty lasts or the exclusion or limitation of incidental or consequential damages, so the above limitations or exclusions may not apply to you. Specific rights under this warranty and other rights vary from state to state.

Attention California Residents:

"WARNING: This product contains chemicals known to the State of California to cause cancer, and birth defects or other reproductive harm."

P/N: 098-019542-45 Rev.1
Date: 07-21-17
Drawn: TEH
Checked: DMH 07-27-17
Approved: JHB 08-03-17

Installation and Maintenance Instructions

B-1100 SERIES

WORKBOARD FAUCET WITH ETERNA OR CERAMA CARTRIDGES

ES **Español:**
Instrucciones de instalación y mantenimiento

FR **Français:**
Instructions pour l'installation et la maintenance

DE **Deutsch:**
Installations- und Wartungsanleitungen

CN **中文:**
安装与维护说明

Exploded View

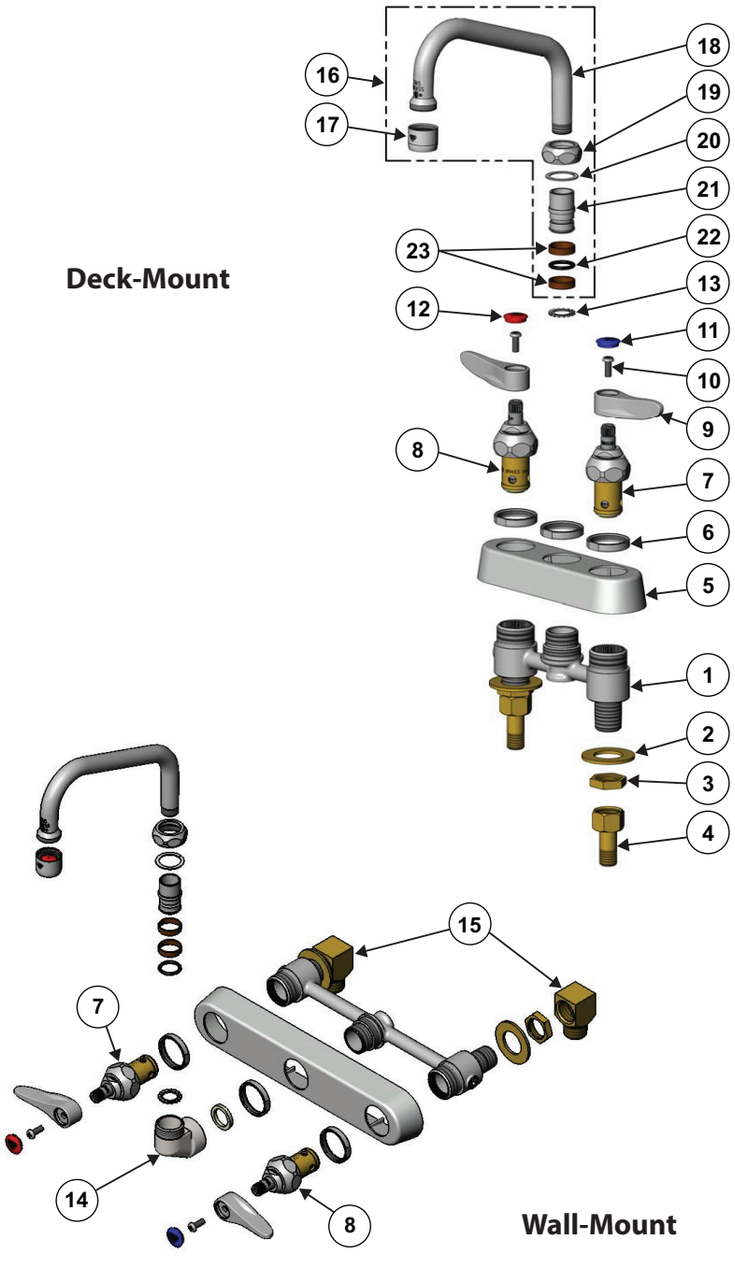

Part Number Guide

Base Faucet Assemblies

1	Base Faucet	N/A
2	Lock Washer, Shank	000999-45
3	Locknut, Shank	002954-45
4	Nut & Tailpiece	150A
5	Escutcheon: B-1100 Eterna Workboard (3-1/2" centers)	019356-40
	Escutcheon: B-1110 Eterna Workboard (4" centers)	019374-40
	Escutcheon: B-1120 Eterna Workboard (8" centers)	019375-40
6	Locknut, Escutcheon	019376-40
7	Eterna Cartridge: Quarter-Turn w/ Spring Check LTC (new style)	012442-40NS
	Cerama Cartridge: Quarter-Turn w/ Check Valve LTC (new style)	012395-25NS
8	Eterna Cartridge: Quarter-Turn w/ Spring Check RTC (new style)	012443-40NS
	Cerama Cartridge: Quarter-Turn w/ Check Valve RTC (new style)	012394-25NS
9	Handle, Lever (new style)	001638-45NS
	Handle, Wrist Action (new style)	B-WH4-NS
10	Screw, Handle	000925-45
11	Index, Blue Button, Press-in (new style)	018506-19NS
12	Index, Red Button, Press-in (new style)	001193-19NS
13	Star Washer, Anti-Rotation	014200-45
	(ITEMS 14-15 FOR WALL-MOUNT ONLY)	
14	B-1100 Knob	000082-40
15	*Optional Supply Connector Kit	B-1100-K

*Order separately

Nozzle Assemblies

16	Asm, Swing Nozzle w/ 2.2 GPM Aerator	
	Swing Nozzle - 6"	059X-A22
	Swing Nozzle - 8"	060X-A22
	Swing Nozzle - 10"	061X-A22
	Swing Nozzle - 12"	062X-A22
	Swing Nozzle - 14"	063X-A22
	Asm, Swivel Gooseneck w/ 2.2 GPM Aerator	
	Swivel Gooseneck - 3"	131X-A22
	Swivel Gooseneck - 2-11/16"	132X-A22
	Swivel Gooseneck - 5-3/4""	133X-A22
	Swivel Gooseneck - 8-13/16"	135X-A22
17	Aerator, 2.2 GPM , 55/64"-27 UN Female	B-0199-01
18	Nozzle (See models)	N/A
19	Nut, Swivel (new style)	N/A
20	Washer, Swivel	009538-45
21	Swivel Piece	N/A
22	O-Ring	001074-45
23	Sleeve, Swivel (2)	011429-45

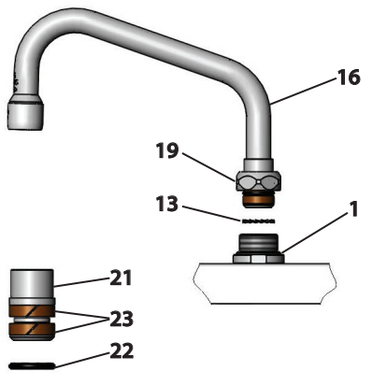

*NOTE: See repair kit 011643-45 for replacement of no.**22** and no.**23**.*

*NOTA: Vea el kit de reparación 011643-45 para las refacciones de las piezas n.º **22** y **23**.*

*REMARQUE : Voir le kit de réparation 011643-45 pour le remplacement des No **22** et **23**.*

*HINWEIS: Reparatursatz 011643-45 zum Ersatz von Nr. **22** und Nr. **23**.*

注意：22、23号的配件包型号为. 011643-45

EN Nozzle Installation

Note: Nozzle should be installed first. See diagram below.

1. Shut off water supply and drain lines. Insert no.**16** into no.**1** and rotate to front of sink. For a rigid nozzle, install no.**13** into no.**1** outlet.
2. Tighten no.**19** firmly with a wrench.

ES Instalación de la boquilla

Nota: Se debe instalar la boquilla en primer lugar. Véase el siguiente diagrama.

1. Corte el suministro de agua y drene las líneas. Inserte la pieza n.º **16** en la n.º **1** y gire hacia el frente del fregadero. En el caso de una boquilla rígida, instale la pieza n.º **13** en la salida n.º **1**.
2. Apriete firmemente la pieza n.º **19**, con una llave.

FR Installation de la lance

Remarque : La lance doit être installée en premier. Voir le schéma ci-dessous.

1. Coupez l'alimentation en eau et les conduites d'évacuation. Insérez le No **16** dans le No **1** et faites pivoter vers l'avant de l'évier. Pour une lance rigide, installez le **13** dans la sortie No **1**.
2. Serrez bien le No **19** avec une clé.

DE Einbau der Düse

Hinweis: Düse muss zuerst montiert werden. Siehe Abbildung unten.

1. Wasserzufuhr ausschalten und Rohre entleeren. Nr. **16** in Nr. **1** einsetzen und zur Vorderseite des Beckens drehen. Bei starrer Düse Nr. **13** in Nr. **1** Auslass einsetzen.
2. Nr. **19** mit einem Schraubenschlüssel fest anziehen.

CN 水嘴安装

注意：水嘴要最先安装。请参见下方图解。

1. 关闭供水及排水管道，将**16**号插入**1**号内并旋转至水池前方。如果是固定水嘴，则应将**13**号放入**1**号出水口内。
2. 用扳手将**19**号拧紧。

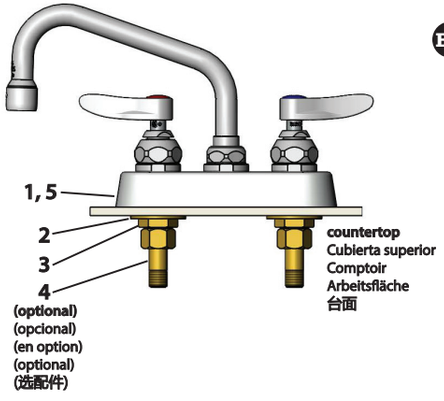

EN Faucet Installation

3. Drill (2) two holes into sink or countertop where you are installing no.**1**.

Note: Inlet spacing: 3-1/2", 4" or 8" center to center.

4. Apply Plumber's Putty to the bottom face of no.**5**. Position no.**1** into the drilled countertop.
5. Install no.**2** and no.**3** on each no.**1** shank and tighten. Install no.**4** if they are to be used.
6. Connect water supply to no.**1** shanks or no.**4** (if applicable) and check for leaks.

ES Instalación del grifo

3. Perfore dos (2) orificios en el fregadero o en la cubierta superior, en donde está instalando la pieza n.º **1**.

Nota: Espaciado en la entrada: Distancia entre centros de 8.89, 10.16 o 20.32 cm (3-1/2", 4" o 8").

4. Coloque masilla de plomería en la superficie inferior de la pieza n.º **5**. Coloque la pieza n.º **1** en la cubierta superior perforada.
5. Instale las piezas n.º **2** y n.º **3** en cada vástago n.º **1** y apriete. Instale las piezas n.º **4** si van a usarse.
6. Conecte el suministro de agua a los vástagos de la pieza n.º **1** o a la pieza n.º **4** (si aplica) y compruebe que no haya fugas.

FR Faucet Installation

3. Forez (2) trous dans l'évier ou le comptoir à l'endroit où vous installez le No **1**.

Remarque : Espacement entre les entrées : 3 1/2 po., 4 po. ou 8 po. entre les axes.

4. Appliquez du mastic de plombier sur la face inférieure du No **5**. Mettez en place le No **1** dans le comptoir percé.
5. Installez les No **2** et **3** sur chacune des douilles No **1** et serrez. Installez les No **4** s'ils doivent être utilisés.
6. Raccordez l'arrivée d'eau aux douilles No **1** ou No **4** (le cas échéant) et recherchez des fuites.

DE Montage der Armatur

3. Zwei (2) Bohrlöcher in die Spüle oder die Arbeitsplatte an der Stelle bohren, wo Nr. **1** eingebaut wird.

Hinweis: Abstand des Einlass: 3-1/2", 4" oder 8" von Mitte zu Mitte.

4. Den Kitt auf die Unterseite von Nr. **5** auftragen. Nr. **1** in die Bohrungen der Arbeitsplatte platzieren.
5. Nr. **2** und Nr. **3** an jedem Schaft Nr. **1** montieren und festziehen. Nr. **4** einbauen, falls sie verwendet werden sollen.
6. Wasserzufuhr zum Schaft Nr. **1** oder Nr. **4** (falls zutreffend) anschließen und auf Dichtheit überprüfen.

CN 龙头安装

3. 在需安装龙头的水槽或者工作台面上钻两（2）个孔。
注意：两孔间距据具体安装的型号而定，可为3-1/2"(89mm), 4"(102mm)或者8”(203mm)。
4. 在**5**号的底面涂上油灰，将**1**号安置到钻好孔的工作台面上。
5. 把**2**号和**3**号安装到相应的**1**号接头上并拧紧。根据需求选装**4**号配件。
6. 在**1**号接头处或者**4**号（如果有使用）处连接供水，并检查是否漏水。

RELATED T&S BRASS PRODUCT LINE

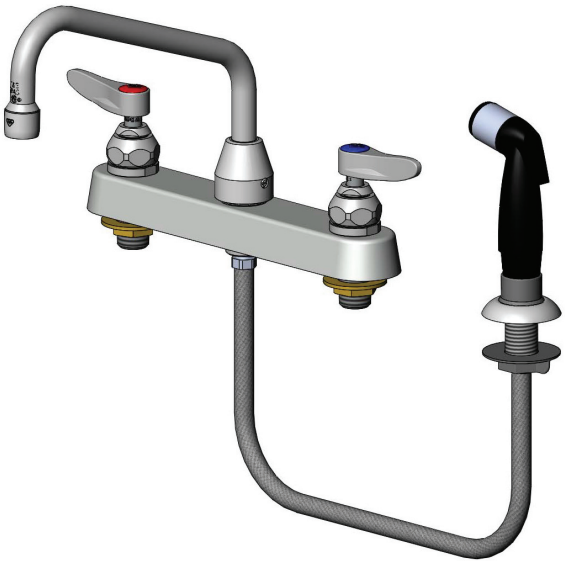

B-1172

Workboard Faucet with Side Spray

T&S BRASS AND BRONZE WORKS, INC.

A firm commitment to application-engineered plumbing products

2 Saddleback Cove, P.O. Box 1088,
Travelers Rest, SC 29690
Phone: (864) 834-4102
Fax: (864) 834-3518
E-mail: tsbrass@tsbrass.com

T & S Brass-Europe
'De Veenhoeve'
Oude Nieuwveenseweg 84
2441 CW Nieuwveen
The Netherlands

RELIABILITY BUILT IN™