ITEM NO.	PART NUMBER	Description	QTY.
1	311-010	BASE ASSEMBLY	1
2	311-011	FRONT ASSEMBLY	1
3	311-012	REAR ASSEMBLY	1
4	311-013	LID ASSEMBLY	1
5	311-005	R SIDE ASSEMBLY	1
6	311-004	L SIDE ASSEMBLY	1
7	363-433	27.25IN GAS SHOCK	2
8	292-000	CORNER BRACKET	4
9	250-790	1/4-20x3/4 CB Z	20
10	253-174	1/4-20 NYLOCK NUT	20
11	254-060	1/4 WASHER Z	20
12	250-795	5/16-18X4 HEX BOLT A307A Z	4
13	253-180	5/16-18 NYLOCK NUT	4
14	254-122	5/16 WASHER Z	8
15	254-123	5/16 PLASTIC WASHER	8

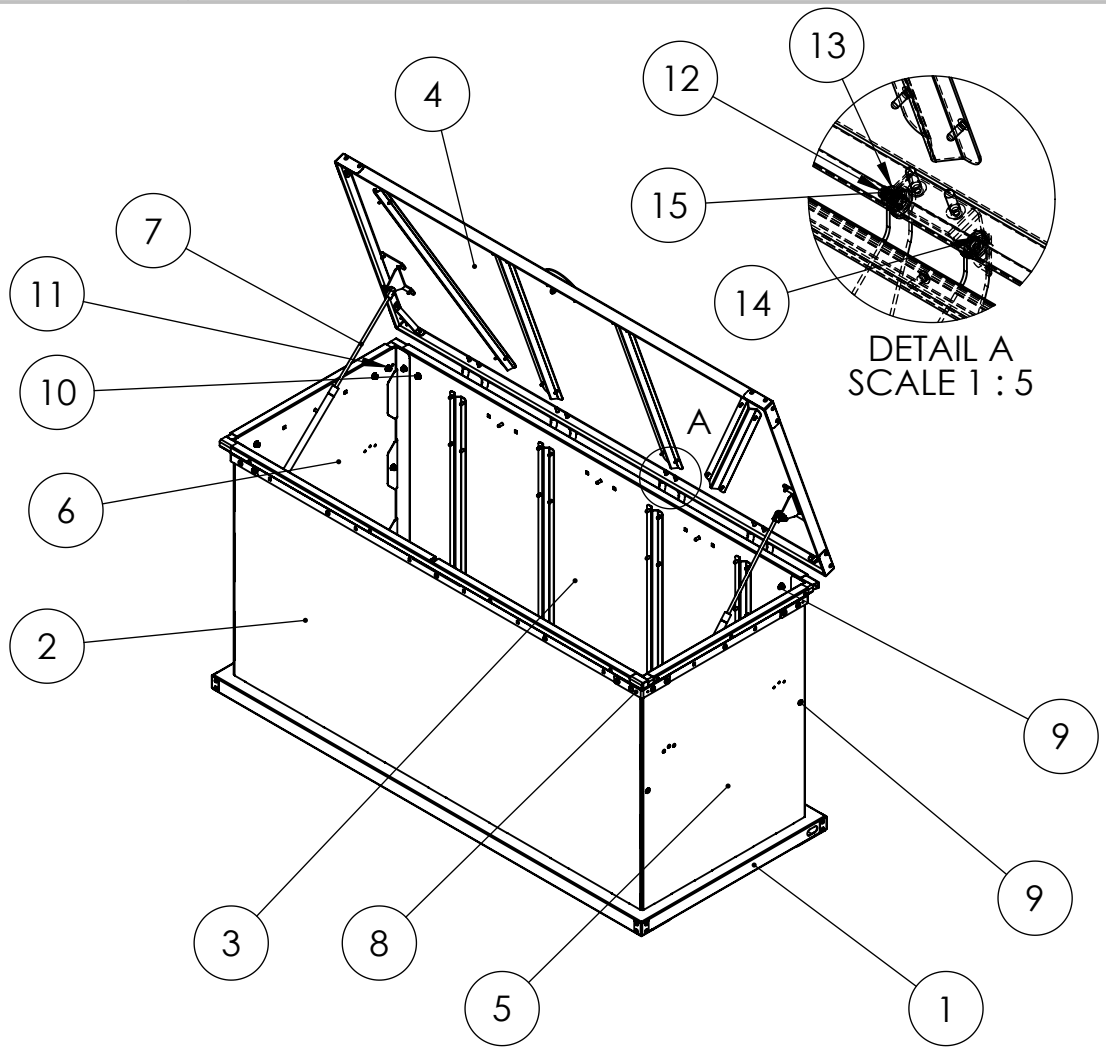

TUFF BOXX
ANIMAL RESISTANT STORAGE SOLUTIONS

PROPRIETARY AND CONFIDENTIAL

THE INFORMATION CONTAINED IN THIS DRAWING IS THE SOLE PROPERTY OF TUFFBOXX INC. ANY REPRODUCTION IN PART OR AS A WHOLE WITHOUT THE WRITTEN PERMISSION OF TUFFBOXX INC. IS PROHIBITED.

UNLESS OTHERWISE SPECIFIED:

DIMENSIONS ARE IN INCHES
TOLERANCES:
FRACTIONAL ± 1/32
ANGULAR: MACH ± BEND ± 0.02
TWO PLACE DECIMAL ± 0.03
THREE PLACE DECIMAL ± 0.005

	NAME	DATE
DESIGN:	A. MILLER	2017-05-03
DRAWN:	A. MILLER	2017-05-03
APPR.:	A. MILLER	2017-05-17
Q.A.:		

MATERIAL: SEE PART DRAWINGS

FINISH: POWDER COATED

DO NOT SCALE DRAWING

TuffBoxx Inc.

TITLE: KODIAK ASSEMBLY

SIZE: A | DWG. NO.: 453-003 | REV:

SCALE: 1:20 | WEIGHT: | SHEET 1 OF 1