CHEF MASTER

PROFESSIONAL

Melville, NY 11747
Tel: (888) 398-8643 Fax: (516) 752-0683

BUTANE TORCH #90269

READ INSTRUCTIONS CAREFULLY BEFORE USING.
KEEP INSTRUCTIONS FOR FUTURE USE.

GAS REFILLING

- Prior to filling with purified butane, make sure the gas refill valve(4) is tight.
- Use only high quality purified butane gas.
- Shake gas container a few times to warm fuel up.
- Turn off the flame adjustment knob with safe ignition(2) clockwise (Fig.A).
- Insert the gas cylinder nozzle vertically down to the gas filler valve to start fueling (Fig.B).
- Press down for 3-4 seconds and repeat 1-3 times. Back spray from filling valve indicates that torch is full.
- At the first sight of liquid gas over-flowing out of the filling valve, stop fueling immediately. Putting too much fuel in the torch can cause a serious problem of flaring.
- After fueling, allow a few minutes for gas to stabilize before operation.

⚠WARNING: Gas will escape from the tank if tank is full. Do not overfill.

IGNITING

- Squeeze the Flame Adjustment & Igniter Knob(2) then turn a quarter of the way to the left (Fig.C).
- Press Flame Adjustment Knob(2) and the flame will ignite (Fig.D)

FLAME ADJUSTMENT

- Adjust the flame length during use by turning the Flame Adjustment Knob(2).
- Turning left will make the flame longer (Fig.E), and turning it opposite will shorten (Fig.F).
- At higher altitudes, torch may not operate on maximum flame length.

TURNING OFF

- To turn off the flame, simply turn flame adjustable knob(2) clockwise (Fig.F).

⚠WARNING

- Read instructions carefully before using the appliance.
- Keep instructions for future use.
- Operation outside or in a well-ventilated place.
- Use only Butane lighter fuel.
- Keep the torch and gas cartridge out of reach of children.
- Do not use an appliance which shows any damage.
- Butane is very flammable, handle with care.
- Refill the tank in a well-ventilated place, in a flame or ignition source free atmosphere, far from other persons.
- Do not smoke while replacing or refilling.
- Before refilling the device. Read the instructions printed on the gas cartridge.
- Always have a fire extinguisher near the torch and work area.
- Disassembling, modifying the torch or adding parts may be hazardous.
- Never attempt to repair the torch and never use unapproved fuels.
- Do not perforate or burn the gas cartridges even when they are empty.
- For environmental reasons the gas cartridges should be disposed in specific containers for subsequent recycling.
- Avoid breathing welding / soldering fumes. Use a ventilator to maintain good ventilation.
- Work only in a clean place, far from combustible or greased materials.
- Do not point the flame to any person or flammable materials.
- Allow the appliance to cool down normally after using. Make sure that the appliance is shut down before storing.
- ⚠Warning: The flame is not highly visible in the sun.
- Do not store in temperatures over 120°F (50°C). Never leave the torch in direct sunlight or in areas where high temperatures are generated.
- Store the device vertically.
- Pay attention that the safety lock jumps to its original position after use.
- Keep the appliance away from grime. Be careful not to drop the gas torch while using, as it's the most frequent reason for malfunction.
- ⚠Caution: the flame guard could be very hot after using.
- In case that a gas leak (smell of gas), take the appliance outside to a well-ventilaled place immediately, where the leak may be checked.
- Never check the leakage with flame but only with leak detection spray.
- Do not put an ignited appliance unattended at any time.
- Category: direct pressure butane.
- Use purified butane gas.
- Only use in well ventilated areas.
- Consumption rate: 44g/hr (0.6KW)
- Be sure flame is out after use.
- Follow all instructions and warnings provided by manufacturer of appliance.
- Flame guard may become very hot.
- Keep away from children.
- It is recommended to refill the gas after 15 minutes of use to make sure the flame is in good position.

⚠WARNING:

This product can expose you to chemicals including lead and lead compounds, which is known to the State of California to cause cancer. For more information, go to www.P65Warnings.ca.gov

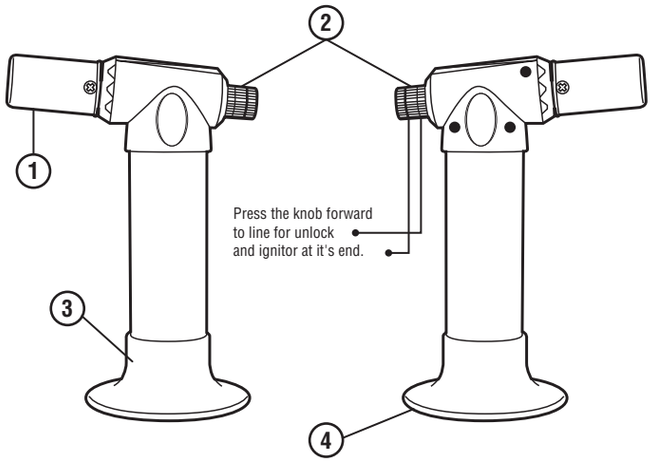

1. Flame Guard
2. Flame Adjustment Knob with Safe Ignition
3. Stand
4. Filler Valve(not shown, under torch)

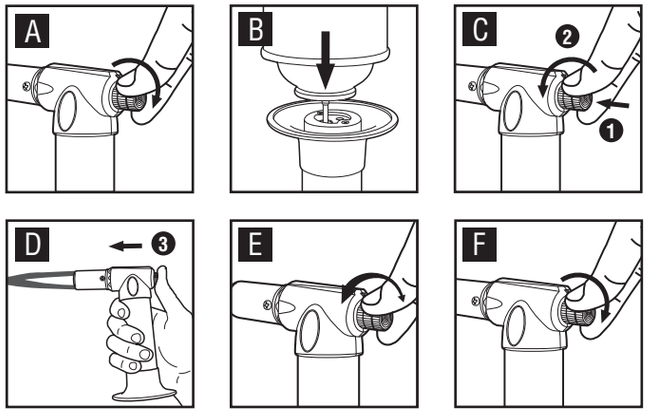

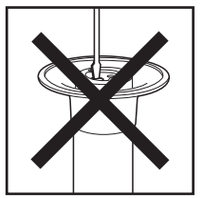

IMPORTANT: After 10 minutes of continuous use, be sure to shut down the torch for 5 minutes to prevent Flame Guard(1) damage or overheating.

Do not try to repair or disassemble any parts of the torch.

297x210mm