PROFESSIONAL CHEF'S TORCH #90268

OPERATING INSTRUCTIONS

CHEF MASTER®
PROFESSIONAL

Melville, NY 11747
Tel: (888) 398-8643 Fax: (516) 752-0683

⚠ WARNING

- Read instructions carefully before using the torch. Keep instructions for future use.
- Keep out of children's reach.
- Do not use product which shows any signs of damage or tampering.
- Only use in a well-ventilated area.
- Read instructions carefully before refilling.
- Use only Butane lighter fuel.
- Butane is flammable. Handle with care.
- Refill tank in a well-ventilated area, in a flame or ignition source free atmosphere, and away from other persons.
- Do not smoke when replacing or refilling.
- Always have a fire extinguisher near the torch and work area.
- Disassembling, modifying the torch or adding parts may be hazardous.
- Never attempt to repair the torch and never use unapproved fuels.
- Do not perforate or burn the gas cartridges even when they are empty.
- For environmental reasons, the gas cartridge should be disposed in specific containers for subsequent recycling.
- Avoid breathing fumes and use ventilator to maintain good ventilation.
- Do not point the flame to any person or flammable materials.
- Allow the torch to cool down normally after use.
- Ensure the torch is shut down before storing.
- Ensure the safety lock is in the original position after use.
- Do not store in temperatures over 104°F (40°C). Never leave the torch in direct sunlight or in areas where high temperatures are generated.
- Store the device vertically.
- Warning!: The flame is not visible in sunlight.
- Keep appliance away from grime. Be careful not to drop the gas torch while using, as it's the most frequent reason for malfunction.
- Caution: Flame guard could be very hot after use.
- In case of a gas leak (smell of gas), take the appliance outside to a well-ventilated area immediately, where the leak may be checked.
- Only use leak detection spray to check leakage.
- Do not leave a lit appliance unattended at any time.

REFILLING GAS

- Use only Butane Gas.
- Turn the 'safety knob for gas flow' clockwise until the end (2/3 revolutions).
- Hold the gas torch upside down and insert the gas container nozzle directly into the refill valve (fig.1).
- Let the gas torch stand for at least 2 minutes for the gas to stabilise.

IGNITION

- Push the red safety latch upwards to unlock postition and turn the 'safety knob for gas flow' counter-clockwise 2/3 revolutions (fig.2). The gas will hiss out through the opening/nozzle. Press the Ignition Button to light the flame (fig.3).

SETTING THE FLAME

- Fuel consumption ca 30g/h.
- Set the length of the flame by using the 'safety knob for gas flow'. Clockwise for a smaller flame, counter-clockwise for larger.
- Set the width by turning the knob for airflow.
- To extinguish the flame, turn the 'safety knob for gas flow' clockwise as far as it will go (fig.4). For safety reasons, switch the red safety latch. down to 'lock' position after the flame is extinguished.

DISPOSAL

- Follow local regulations when disposing of this product. If you are unsure about how to dispose of this product, please contact your local municipality.

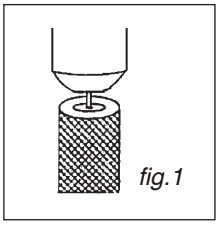
fig.1

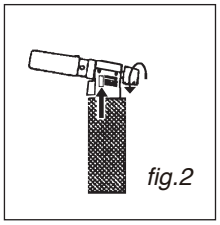
fig.2

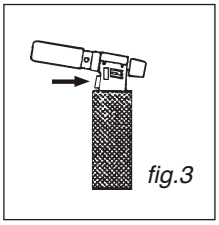
fig.3

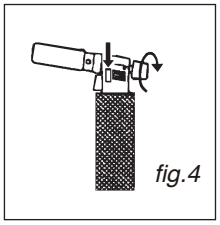
fig.4

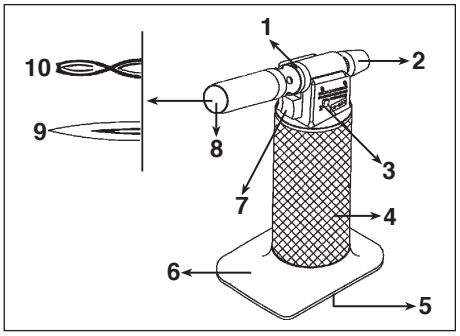

1. Setting of airflow
2. Setting knob for gas flow
3. Safety latch
4. Metal construction
5. Refill valve
6. Foot plate
7. Ignition button
8. Flame protection
9. Normal flame
10. Soft flame

⚠ WARNING:
This product can expose you to chemicals including lead and lead compounds, which is known to the State of California to cause cancer. For more information, go to www.P65Warnings.ca.gov

For Information Call (888) 398-8643 or Visit Our Website at Chef-Master.com