08/2020

Estella

CAFFÉ

USER MANUAL

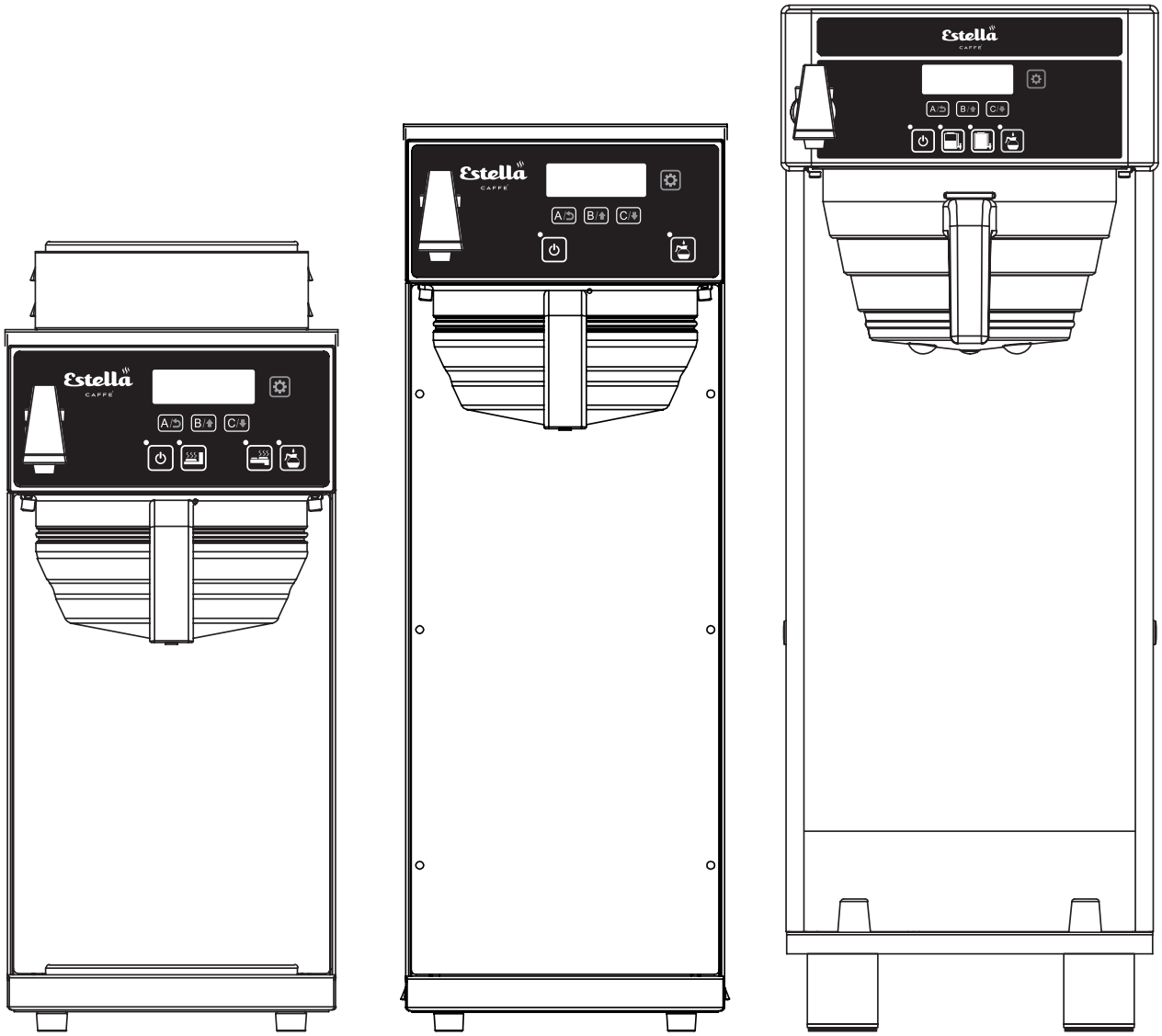

COFFEE BREWERS

Decanter Brewers
235ECB2D, 236ECB3D2U, 236ECB3D3L

Airpot Brewers
236ECBAP1

Shuttle Brewers
236ECSB1

INDEX

NOTE: Save these instructions for future reference.

Prop 65 Warning

WARNING: This product can expose you to chemicals including lead, which are known to the State of California to cause cancer, birth defects, or other reproductive harm. For more information, go to www.p65warnings.ca.gov

Estella CAFFÉ

WARNINGS

⚠ *Read and understand all instructions before using the appliance. CAUTION! HOT SURFACE!*

- This appliance is designed for commercial use only.
- This appliance must be placed on a level surface able to adequately support its weight.
- Users should not leave the appliance unattended while it is in operation.
- Never immerse the appliance in water.
- Never pour hot water, coffee, or coffee powder into the water reservoir.
- Do not overfill the water reservoir.
- Do not unplug the appliance if your hands are wet.
- Do not unplug the appliance by pulling the cord.
- Do not attempt to repair or replace the power cord if it becomes damaged. Contact a qualified service agent.
- While the appliance is in use, some parts will become very hot. Ensure that the cord does not come in contact with any hot parts.
- Be careful not to touch any hot surfaces.
- Do not allow empty decanters to sit on the hot plate.

⚠ *In case of overflow, turn the power switch "OFF" immediately to stop the process.*

⚠ *Carefully unpack the coffee brewer and inspect for damage and missing parts.*

SPECIFICATIONS

	236ECB2D	236ECB3D2U	236ECB3D3L	236ECBAP1	236ECSB1
Warmers	2	3	3	---	---
Server	Decanter	Decanter	Decanter	Airpot	Shuttle
Voltage	120V	120V	120V	120V	120V
Wattage	1700W	1800W	1800W	1500W	1800W

SETUP

CONTROL PANEL

[1] Display screen
[2] Setting & Service menu
[3] Recipe: A/B/C (Gray color for setting option)
[4] Enable brew on/off switch
[5] On/Off switch for lower warmer/Half batch
[6] On/Off switch for front upper warmer/ Full batch
[7] On/Off switch for rear upper warmer
[8] Brew switch (Pressing and releasing)
[9] Hot water faucet

REAR COVER

[10] Main Power Switch
[11] Power cord
[12] Solenoid/water inlet fitting
[13] Ground connector terminal

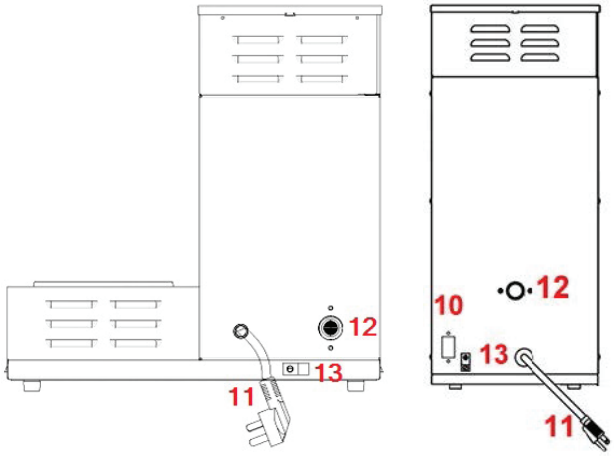

INCLUDED ACCESSORIES

Tea Brew Basket
(3.0 mm hole)

Coffee Brew Basket
(4.2-5.0 mm holes)

** Wire Rack must always insert into the bottom of brew basket.*

⚠ ***Due to different water pressure in different area, it is necessary to calibrate water volume before brewing coffee or tea.***

Estella CAFFÉ

INSTALLATION

Check the brew basket is assembled correctly. The wire rack must wedge firmly at the bottom of the brew basket.

1. Place the brewer on a dry, firm and horizontal surface with plenty of room above to allow easy and safe connection to the water source.
2. The coffee maker must be connected to a cold water system. Plumbing one side of inlet tube into the water source and the other side of tube connects to the solenoid. Then, switch on the water source step by step.

⚠ ***A qualified water filter or softer water must be used or the warranty will be voided.***

WATER GUIDELINES

CONDITION	MINIMUM	MAXIMUM
Total Dissolved Solids	50 PPM	125 PPM
Total Hardness	3 GPG	5 GPG
pH	6.5 pH	7.5 pH
Free Chlorine	---	0.5 PPM
Total Chlorine	---	1 PPM

3. Slide the filled brew basket into the brew rails under the control panel.
4. Place an empty server at the correct position under the brew basket.
5. Plug the machine to the power source and turn on the main power switch on the rear cover for 236ECSB1 model. (some models do not have main power switch on the rear cover.) The display screen will show “Insufficient water storage in the tank”.
6. Press the power button to power on the machine and wait for the tank to fill. Digital display will read "Please wait, tank filling"
7. Wait approximately 15 ~ 20 minutes for the water in the tank to heat and reach the setting temperature, the screen display will show “Ready to Brew, watertemp: °F” when the tank has reached operating temperature. Some water will drip from the sprinkler holder during this period because of thermal expansion and contraction principle. This situation should not occur again when the water reaches the final temperature. (When facing this issue, please place a small container under the faucet. Then open the faucet handle and release some water until the tank filling function is working again.)
8. The coffee maker is now ready for use.
9. During above operation, it is normal to hear some brewing, pumping sounds and see some water vapor coming out of the machine.

CLEANING

Regular cleaning ensures long life. For dirt or smudges on the brewer's exterior, a damp cloth will suffice. If necessary, a non-corrosive, non-abrasive detergent or cleaner may be used. Be sure to unplug the appliance before cleaning

NOBLE CHEMICAL INC. Klearly Koffee

Klearly Koffee is a simple, easy-to-use product that should be used daily to remove or prevent oil residue and mineral build-up, which turns rancid, causing bitter tasting coffee or tea.

DIRECTIONS FOR CLEANING GLASS DECANTERS

Use daily for best results.

1. Shake bottle. Apply 3-4 squirts (approx 1/4 oz Per 1 gal. of liquid) Klearly Koffee into the decanters (not included). Add very hot water (not boiling)
2. Use a carafe brush for best results on tough stains
3. Empty solution and rinse vessel thoroughly with clean, warm water. Air dry or wipe clean before next use.

THE IMPORTANCE OF DELIMING

To prolong your coffee brewer's life and maintain a consistent, quality product, regular deliming is recommended. When hard water is heated, minerals are left behind which can inhibit optimum performance. You should perform the following deliming process at least every 6 months. If your water is extremely hard, monthly deliming is recommended

DELIMING PROCEDURE

- Mix 10 oz. of fresh or condensed lemon juice with 32 ozof water.
- Place brew basket in proper location.
- Place and empty container at the correct position under the brew basket.
- Connect to the solenoid valve with an external bottle water pump that substitutes for the water source. Then, pump the lemon juice mixture into the water tank by following the brewing procedure.
- Let stand for 10 minutes and repeat 2-3 times for best descaling results
- Connect back to the water source and run the brewing cycle several times with clean water to rinse out the lemon solution. Turn off the power and wait until the water cools down inside the boiler. Finally, use the drain pipe to release all remaining water in the boiler until lemon flavor is completely removed.

If the brewer suddenly stops working during a normal brewing cycle, deliming may be necessary.

20" Deliming Spring 3591901033

This deliming spring fits into the sprayhead opening of pour-over coffee makers to loosen lime deposits. Made of stainless steel. Sold Separately.

PROGRAMMING

1. Turn on the power
2. Within the first 3 seconds of powering the unit on, press and hold on A & C buttons at the same time
3. Select the Language
4. Select Temperature unit (C/F)
5. Select Volume unit (Liter/Ounce)

BUTTON FUNCTIONS

A B C	Recipe A, B, C and Hiding Recipe	Grey Arrow = Back, Yes/+, No/-
	Turn warmer plates On/Off	Plates correspond to the relevant graphics.
	Brew half or full batch	Batches correspond to the relevant graphics.
	1. Setting 2. Service Menu 3. Hiding Recipe	1. Setting button includes setting temperature, watervolume, pulse time, water out manner and safety interval… etc. 2. Press and hold on 3 seconds to access menu mode. This is used to access into the program mode and step forward through the menu. 3. A hidden recipe for testing purpose
	1. Brewing cycle 2. Lights up 3. Blinking	1. Press once to begin brewing (indicator lights up). 2. Press again to pause brewing (indicator blinking). 3. Press again to resume brewing cycle. Press and hold to turn off cycle
	1. Standby switch 2. On/Off 3. Interrupt	1. Power/Standby switch. 2. Press to turn on and off 3. Interrupt the brew cycle
	Press power switch on the back of machine fo#236ECSB1 first and press enable brew button. Press Enable brew button for all other units	
	Before Status	Insufficient water in tank. Press to turn on and enable tank filling.
	1. After Status 2. After tank fills up	1. Please wait, tank filling... 2. Heating… Water temp. XXX ˚F

CALIBRATION

Before conducting the “calibrate water volume” procedure, a container, measuring cup and an electric scale are required. Scroll to the calibrate flow screen. “Calibrate water volume” program is the second to last option in the function settings.

ACTUAL CALIBRATION VOLUME

Follow the screen indication, measuring the water volume output for 4 minutes. Then, input the actual measuring value. After measuring, convert the volume to oz per minute and remember this parameter to facilitate future adjustment.

INPUT CALIBRATION DATA

Provide the data to qualified person, or input during the calibration procedure. The standard value is approximately 1.1L per minute.

⚠ ***A container, measuring cup and electric scale are required to complete the calibration procedure.***

⚠ ***Execute the calibration procedure once a week to ensure brew volume accuracy.***

QUICK RECIPIES

There are three quick recipes of [A] [B] [C] which are built-into the factory default settings for temperature and water flow-in mode etc. In addition; there is a hiddden recipe when setting up recipies without selecting [A] , [B] or [C], you can consider recipe [D]. Users may set different recipes such as water temperature, volume, immerse volume, immerse time and Pulse Brew cycle.

DECANTER & AIRPOT BREWERS

RECIPE	DESCRIPTION	INPUTS
[A]	190 °F Non-Stop dripping with 63 oz. brew volume.	⏻ ▶ A/↺ ▶
[B]	198 °F Non-Stop dripping with 63 oz. brew volume.	⏻ ▶ B/↑ ▶
[C]	203 °F Non-Stop dripping with 63 oz. brew volume.	⏻ ▶ C/↓ ▶
[D]	185 °F Non-Stop dripping with 63 oz. brew volume	⏻ (select nothing)

SHUTTLE BREWERS

RECIPE	DESCRIPTION	INPUTS
[A]	190 °F Non-Stop dripping with 202 oz. brew volume.	⏻ ▶ A/↺ ▶ ▶
[B]	198 °F Non-Stop dripping with 125 oz. brew volume.	⏻ ▶ B/↑ ▶ ▶
[C]	203 °F Non-Stop dripping with 101 oz. brew volume.	⏻ ▶ C/↓ ▶ ▶
[D]	185 °F Non-Stop dripping with 125 oz. brew volume	⏻ (select nothing)

Users may change the parameters for the recipe [A], [B], [C] or [D] as needed. Select [A], [B] or [C] and press and hold on ⚙ for 3 seconds. The system will enter the Setting Menu. Follow the indications on the screen to set various brewing parameters as needed.

The new setting parameters will replace the factory default setting after completing above procedure.

The hidden recipe can also be programmed by pressing and and holding ⚙ for 3 seconds, but without [A], [B] or [C] selected.

DRAINING

When the brewer needs to moved, repaired, de-scaled, or emptied for extended storage, the remaining water in the boiler tank can be released following the steps below:

1. Unplug the power cord from the electrical socket and let the brewer cool down for at least 40 minutes to avoid any burn injuries
2. Remove the two black fixed pillars from brewer base and loosen the 6 screws of the front cover. Remove the front cover
3. A white water pipe tube and hose shutoff clamp can be seen inside of brewer (Figure 1)
4. Fasten the white shut off clamp at the end of the drain hose (Figure 2)
5. Look for a connector in the front of water tube clips with a metal clamp. Press down on the metal clamp and move slightly to the end of tube (Figure 3)
6. Place the end of the drain hose in a container that has a capacity of 3 gallons or more
7. Release the white clamp to drain water out from the tank
8. When the water tank is empty, move the drain hose back to the original position. Then, press down on the metal clamp and move it back to the original position
9. Check that the white shut off clamp has been loosened
10. Replace the front panel and tighten the screws
11. Reinstall the black fixed pillars back to the brewer base

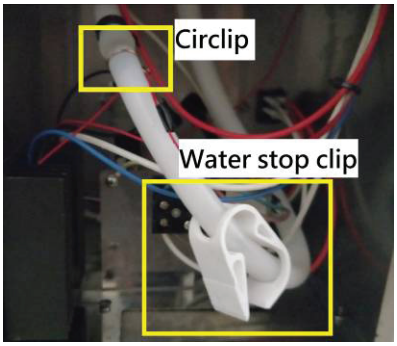

Figure 1

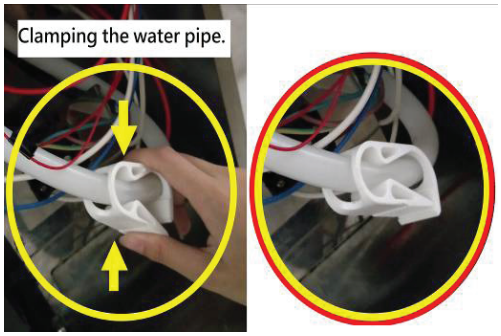

Figure 2

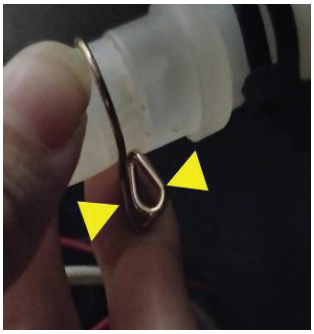
Figure 3

PARTS DIAGRAM

Decanter Brewer #236ECB2D

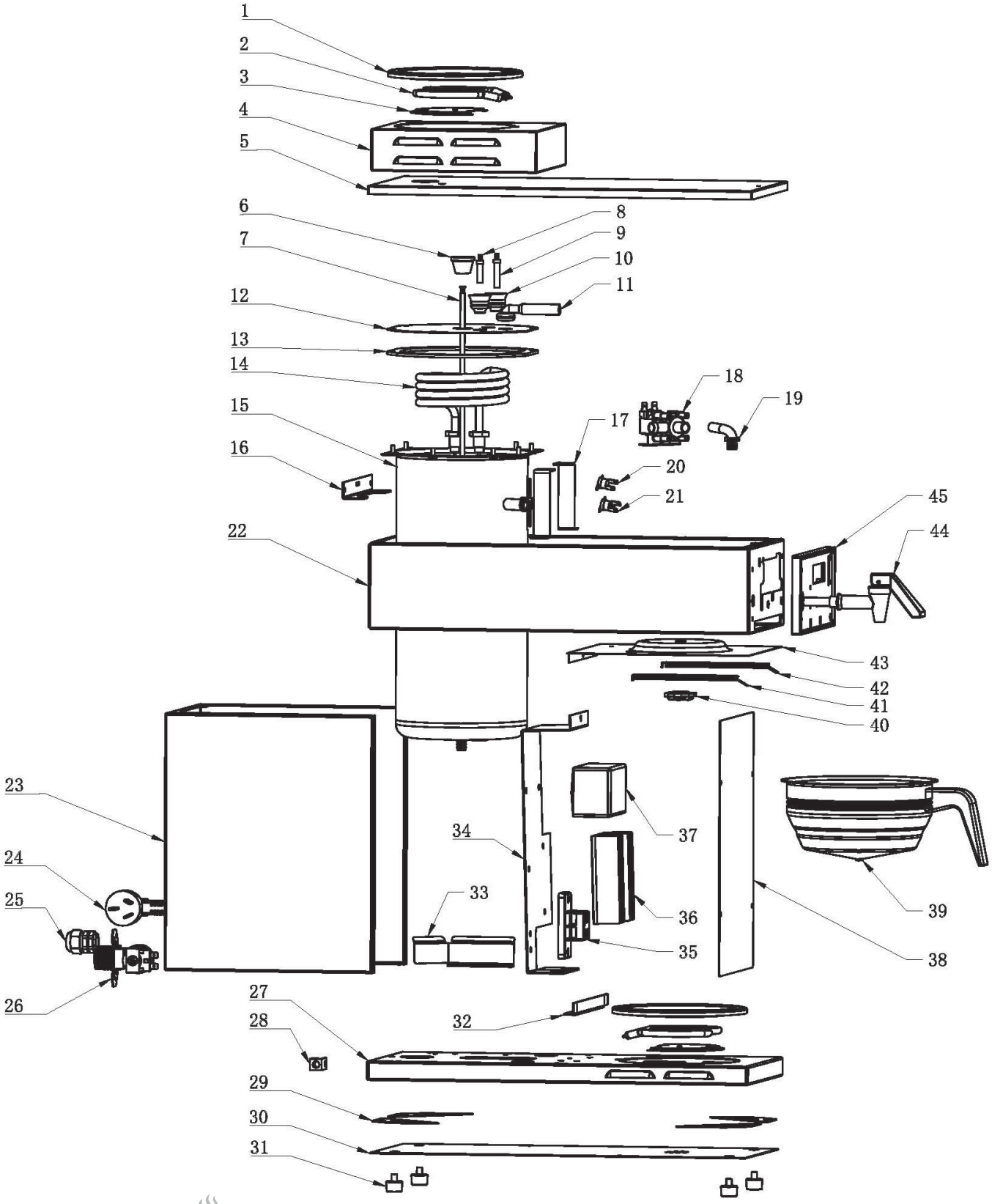

Estella CAFFÉ

PARTS DIAGRAM

Decanter Brewer #236ECB3D2U

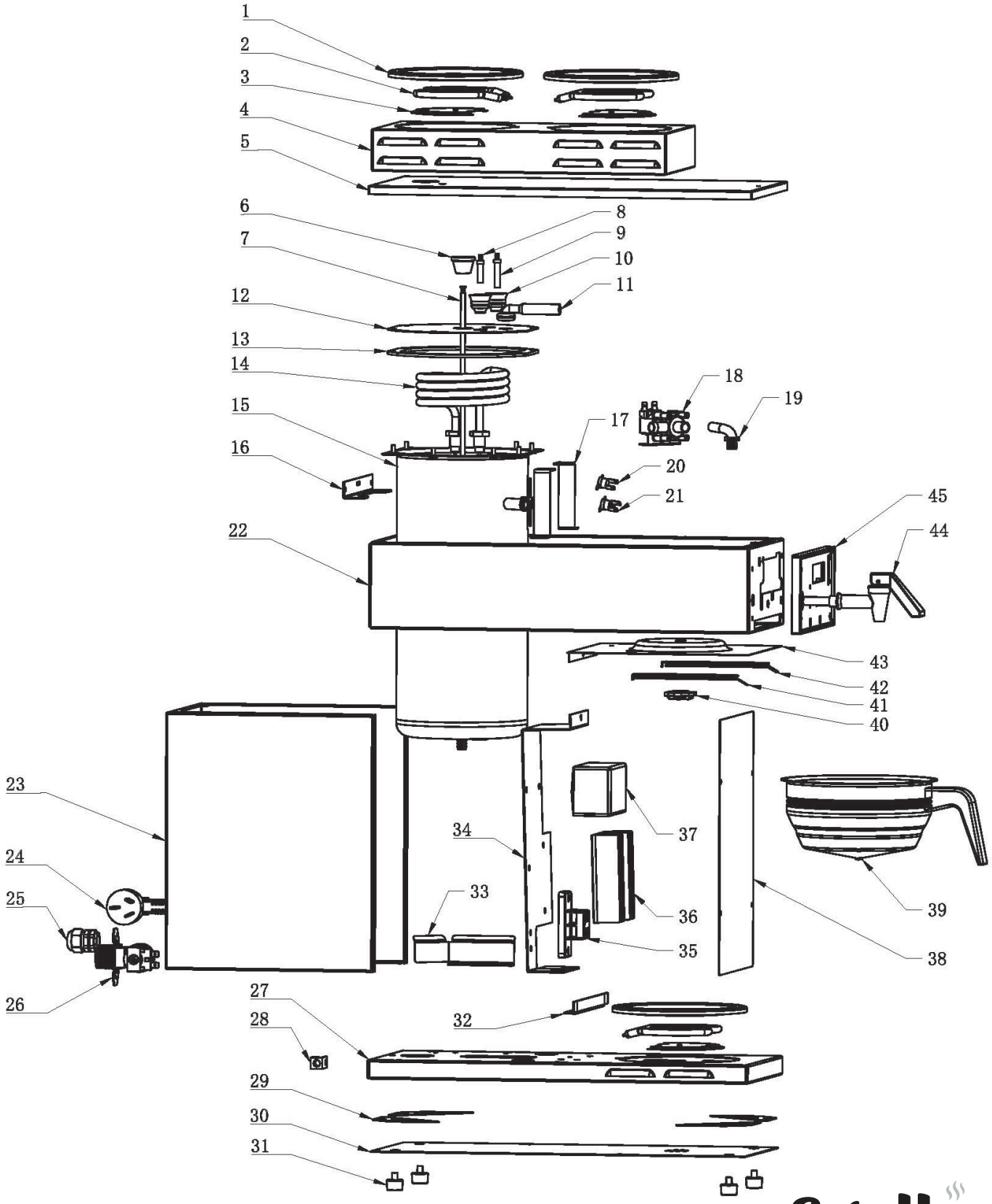

Estella CAFFÉ

PARTS DIAGRAM

Decanter Brewer #236ECB3D3L

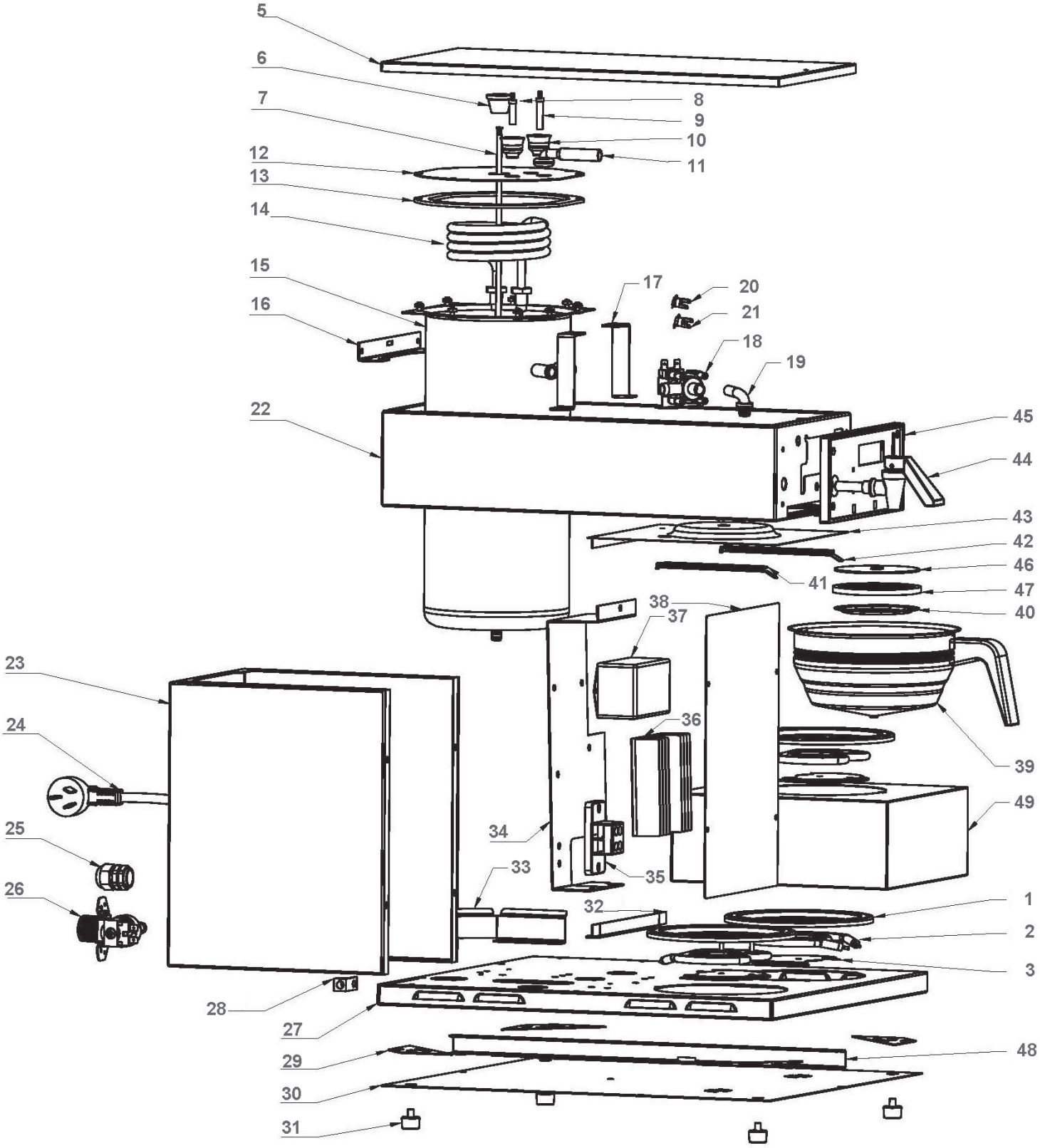

Estella CAFFÉ

PARTS DIAGRAM

Airpot Brewer #236ECBAP1

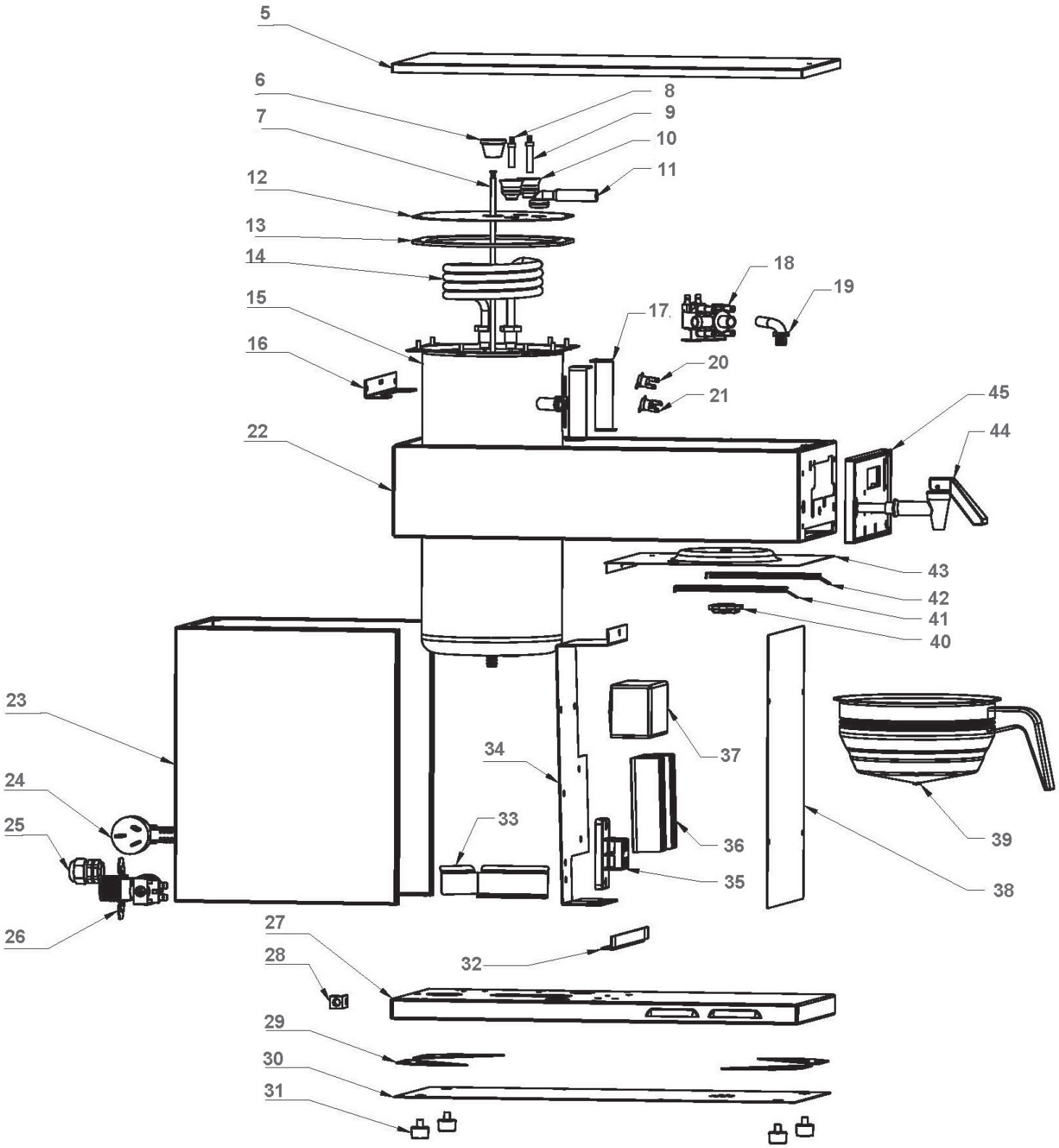

Estella CAFFÉ

PARTS LIST

Brewers #235ECB2D, #236ECB3D2U, #236ECB3D3L, #236ECBAP1

#	VENDOR	DESCRIPTION
1	AI001	Warming Plate
2	AI002	Heating Element of Warming Plate
3	AI003	Warming Plate Holder
4	AI004	Upper Warming Plate Frame
5	AI005	Upper Cover
6	AI006	NTC Silicone Sealing
7	AI007	NTC Temperature Probe
8	AI008	Water Level Detector (Short)
9	AI009	Water Level Detector (Long)
10	AI010	Water Level Detector Seal
11	AI011	Water Reservoir Exhaust Tube
12	AI012	Water Reservoir Cover
13	AI013	Water Reservoir Sealing Ring
14	AI014	Heating Element
15	AI015	Water Reservoir
16	AI016	Water Reservior Rear Frame
17	AI017	Water Reservior Front Frame
18	AI018	Outlet Solenoid Valve
19	AI019	L Shape Water Out Joint Tube
20	AI020	Auto Thermostat 110°C
21	AI021	Manaul Thermostat 130°C
22	AI022	Upper Frame
23	AI023	Body Frame

#	VENDOR	DESCRIPTION
24	AI024	Power Cord
25	AI025	Wire Clip
26	AI026	Inlet Solenoid Valve
27	AI027	Base Frame
28	AI028	Ground Germinal
29	AI029	Reinforced Tube Of Base Frame
30	AI030	Bottom Cover
31	AI031	Foot
32	AI032	Reinforced Board Of Body Frame
33	AI033	The Platen Of Power Cord
34	AI034	Inner Bracket
35	AI035	Terminal Block
36	AI036	Cooling Fin
37	AI037	EMI Filter
38	AI038	Front Cover
39	AI039	Brew Basket
40	AI040	Sprinkler
41	AI041	Left Track
42	AI042	Right Track
43	AI043	Sprinkler Bracket
44	AI044	Spigot
45	AI045	Control Panel
46	AI046	Sprinkler Cover
47	AI047	Sprinkler Sealing Ring
48	AI048	Reinforced Bracket of Base Frame
49	AI049	Side Warming Plate Frame

PARTS DIAGRAM

Shuttle Brewer #236ECSB1

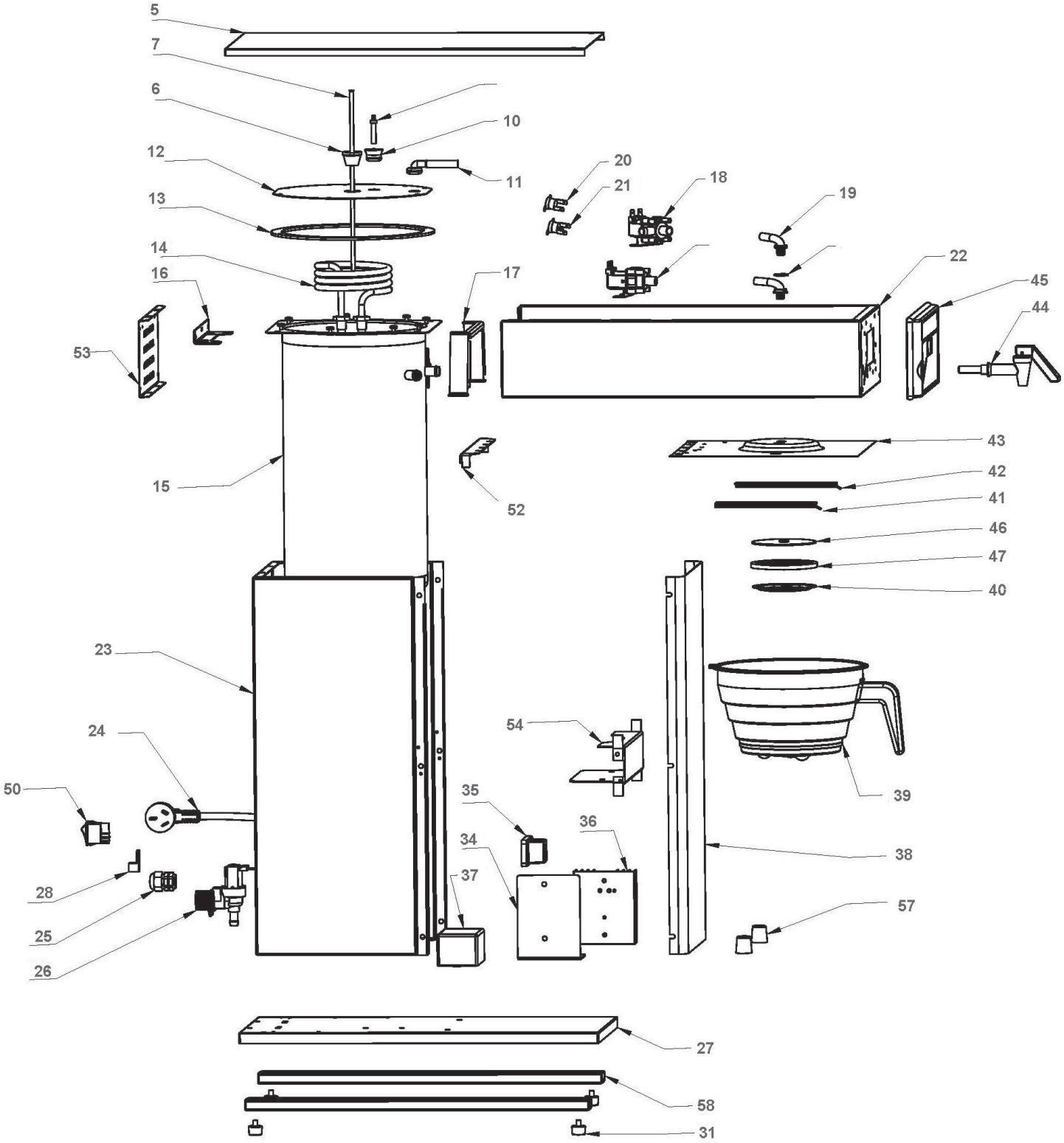

Estella CAFFÉ

PARTS LIST

Shuttle Brewer #236ECSB1

#	VENDOR	DESCRIPTION
5	AIS005	Upper Cover
6	AIS006	NTC Silicone Sealing
7	AIS007	NTC Temperature Probe
10	AIS010	Water Level Detector Seal
11	AIS011	Water Reservoir Exhaust Tube
12	AIS012	Water Reservoir Cover
13	AIS013	Water Reservoir Sealing Ring
14	AIS014	Heating Element
15	AIS015	Water Reservoir
16	AIS016	Water Reservior Rear Frame
17	AIS017	Water Reservior Front Frame
18	AIS018	Outlet Solenoid Valve (Main)
19	AIS019	L Shape Water Out Joint Tube
20	AIS020	Auto Thermostat 110°C
21	AIS021	Manaul Thermostat 130°C
22	AIS022	Upper Frame
23	AIS023	Body Frame
24	AIS024	Power Cord
25	AIS025	Wire Clip
26	AIS026	Inlet Solenoid Valve
27	AIS027	Base Frame
28	AIS028	Ground Germinal
31	AIS031	Foot

#	VENDOR	DESCRIPTION
34	AIS034	Inner Bracket
35	AIS035	Terminal Block
36	AIS036	Cooling Fin
37	AIS037	EMI Filter
38	AIS038	Front Cover
39	AIS039	Brew Basket
40	AIS040	Sprinkler
41	AIS041	Left Track
42	AIS042	Right Track
43	AIS043	Sprinkler Bracket
44	AIS044	Spigot
45	AIS045	Control Panel
46	AIS046	Sprinkler Cover
47	AIS047	Sprinkler Sealing Ring
50	AIS050	Power Switch
51	AIS051	Water Level Detector
52	AIS052	Reinforced Bracket A Of Body Frame
53	AIS053	Supporter cover of Upper Frame
54	AIS054	Reinforced Bracket B Of Body Frame
55	AIS055	Sealing Ring
56	AIS056	Outlet Solenoid Valve (Secondary)
57	AIS057	Position Fixed Pillar
58	AIS058	Foot Supporter

TROUBLESHOOTING

PROBLEM	CAUSE	ACTION / REMEDY
Filling time is too long	No water out	Check the water source
	Inlet solenoid block up	Turn off the water source
		Disassemble the inlet solenoid and clean the filter mesh
		Reinstall back to machines and turn on the water source
	The pressure of water source is too low.	Water pressure is lower than working pressure 1.0kg/cm2
		Install another pressurized motor
	Inlet solenoid failure or circuit board failure	The screen displays [Please wait, tank filling]
		Inlet solenoid with working pressure > solenoid abnormal > replace solenoid
		Inlet solenoid without working pressure > circuit board abnormal > replace circuit board
Screen displays **[NTC Trouble/Broken]**	Temperature sensor failure	Check/replace
Temperature is too high	Temperature sensor failure	Check/replace
Power is ON, Screen is not displaying	No power input	Check the power source
	Circuit board malfunction	Replace circut board
Screen displays normal, but touch inputs are not working	Control board strip not properly connected	Check all touch buttons. Check if the control board strip is inserted correct or not. Check if the control board strip pin and the drop-out line is connected incorrectly. 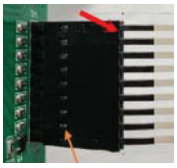
	Control board malfunction	Replace control board
	Circuit board malfunction	Replace circuit board
Filter pan is overflowing during brew cycles	Filter pan is blocked up	Lack of springs > insert the springs to the filter pan
		No filter paper or filter paper is blocking the hole > put in/replace filter paper
	The interval of pulse time is not enough	Set the proper interval of pulse time
Overflow tube is leaking	Water pressure is higher than working pressure	Add additional pressure reduce valve
	Inlet solenoid failure	Check/replace

TROUBLESHOOTING

PROBLEM	CAUSE	ACTION / REMEDY
Power is On, nonstop dripping from main and sub spray head	Water quality abnormal	Check that the water in source is not purified or treated with reverse osmosis. The units will not be able to detect water level properly without typical mineral balance. Use a different water source
	The water level detector pin is inserted incorrectly	Check and re-insert to the correct position
	Circuit board malfunction	Replace circuit board
Sustained warming up	Temperature probe failure	Replace temperature probe
	Circuit board malfunction	Replace circuit board
Water does not heat to proper temperature	Limit thermostat abnormal	Check/replace thermostat
	Heating element failure	Replace heating element
	Circuit board malfunction	Replace circuit board
Water out volume is insufficient	Insufficient water output at peak usage	Connect to a lone water source or add a constant water pressure regulator
	Normal water output volume is insufficient	Clean solenoid filter mesh regularly
		Calibrate the water volume

BREWING TIPS

Fresh and good-tasting water is essential since it makes up more than 98% of a cup of coffee or tea. The brewing, pulse, extraction or pouring water time is primarily determined by the ground size.

If the ground size is coarser, it causes under extraction and tasteless coffeeIf the ground size is too fine, it causes over-extraction and a bitter tasteTo get the best flavors from a coffee, we suggest a medium grind (5-grain size)**NEVER reuse the coffee filter paper and coffee grounds.**

DECANTER & AIRPOT BREWERS

ITEM	BEANS TO WATER	TEMP.	SOAK TIME	PULSE BREW
Breakfast Coffee	1 : 16	92°C / 197°F	10-20 sec.	---
Specialty Coffee	1 : 15	90°C / 194°F	10-20 sec.	10 sec. / 5 sec
Ice Coffeee	1 : 13	94°C / 201°F	20-30 sec.	10 sec. / 5 sec
< 2.5 Liter Brew	1: 18	92°C / 197°F	20-30 sec.	1 sec. / 5 sec

***Not exact recipes, for reference only*

SHUTTLE BREWERS

ITEM	BREW RATIO	TEMP.	INITIAL DRIP	SOAK TIME	PULSE BREW
Coffee	1 : 17	92°C / 197°F	60 sec.	20 sec.	---
Tea, < 5 Liter	1 : 40	94°C / 201°F	60 sec.	3-5 mins.	18 sec. / 20 sec
Tea, > 4 Liter	1 : 40	94°C / 201°F	30 sec.	3 mins.	18 sec. / 20 sec
British Tea	1 : 40	96°C / 205°F	60 sec.	5 mins.	10 sec. / 10 sec
Oolong Tea	1 : 40	96°C / 205°F	60 sec.	5 mins.	10 sec. / 10 sec
Green Tea	1 : 40	88°C / 190°F	60 sec.	5 mins.	10 sec. / 10 sec
Jasmine Tea	1 : 40	88°C / 190°F	60 sec.	5 mins.	10 sec. / 10 sec

***Not exact recipes, for reference only*

WARRANTY INFORMATION

Estella Caffe coffee brewers are backed by a 1-year replacement warranty. These select Estella products are warranted only to be free from defects in material and workmanship for a period of 1 year from the date of delivery. Proof of purchase is required to obtain warranty coverage. This warranty is only valid to the original purchaser and only to equipment installed in the contiguous United States.

Covered Equipment

This warranty is valid on Estella Caffe coffee brewers.

This Limited Warranty does not cover:

- Equipment sold or used outside of the contiguous United States.
- Equipment purchased used, or sold by an unauthorized reseller.
- Equipment that has been improperly installed, used, or maintained.
- The use of unfiltered water. Failure to use and maintain a water filter will void the warranty.
- Equipment that has been subject to abuse, misuse, harsh chemical action, modifications made without the approval of Estella, damage caused by flood, fire, or other acts of God.
- Equipment missing a serial number or proof of purchase.
- Equipment that has been serviced outside of the warranty, aside from professional installation.
- Equipment that was damaged as part of shipping and handling. Please contact your authorized retailer for assistance.
- Equipment that has been changed, modified, or repaired with parts not authorized by Estella.
- Any adjustments, calibrations, leveling, tightening of fasteners, etc.
- Damage caused by unqualified operators. Estella products are designed for use by professionally trained bakers only.
- Any parts determined to be wearable items, such as belts, by Ready Kitchen Warranty or Estella.

This warranty provides the exclusive remedy against damage relating to Estella products, whether in contract or in tort or under any other legal theory, and whether arising out of warranties, representations, instructions, installations or defects from any cause. Estella shall not be liable, under any legal theory, for loss of use, revenue or profit, or for substitute use or performance, or for incidental, indirect, or special or consequential damages or for any other loss of cost of similar type. The laws of some jurisdictions limit or do not allow the disclaimer of consequential damages. If the laws of such a jurisdiction apply to any claim by or against Estella, NO limitations and disclaimers contained here shall be the greatest extent permitted by law. Estella and Ready Kitchen Warranty shall not be liable for more than the purchase price of the equipment, inclusive of applicable freight and sales tax.

If required by Estella customer shall return to Estella for examination any failed product or part to confirm that the part has failed as a result of material or workmanship.

To obtain warranty information or make a claim against this warranty, please contact the location where you purchased the product.

www.WebstaurantStore.com

Call 717-392-7472.

You must have your order number ready when contacting.

The Restaurant Store
Please contact your local store directly.
www.TheRestaurantStore.com
Call 717-392-7261. You must have your order number ready when contacting.

Clark Food Service Equipment, PRO Marketplace, Hometown Provisions
Please contact your account manager directly. If you do not know your account manager, please call 717-392-7363 for CFSE and Pro Marketplace or 717-464-4165 for Hometown Provisions.

Residential, Food Truck, and Outdoor Commercial Use warranty
Due to the professional nature of Estella products, they should only be installed indoors in permanent kitchens or bakeries and operated by professional operators. There shall be no warranty provided for any use outside of the named operating conditions. Unapproved use is done at the risk of the purchaser and Estella shall not be liable for any damages caused in these situations.