HCC1010A/W, HCC1410A/W, HMC1010A/W, HMC1410A/W
Horizon Elite™ Ice Machines (Self-contained)

Order parts online
www.follettice.com

Operation and Service Manual

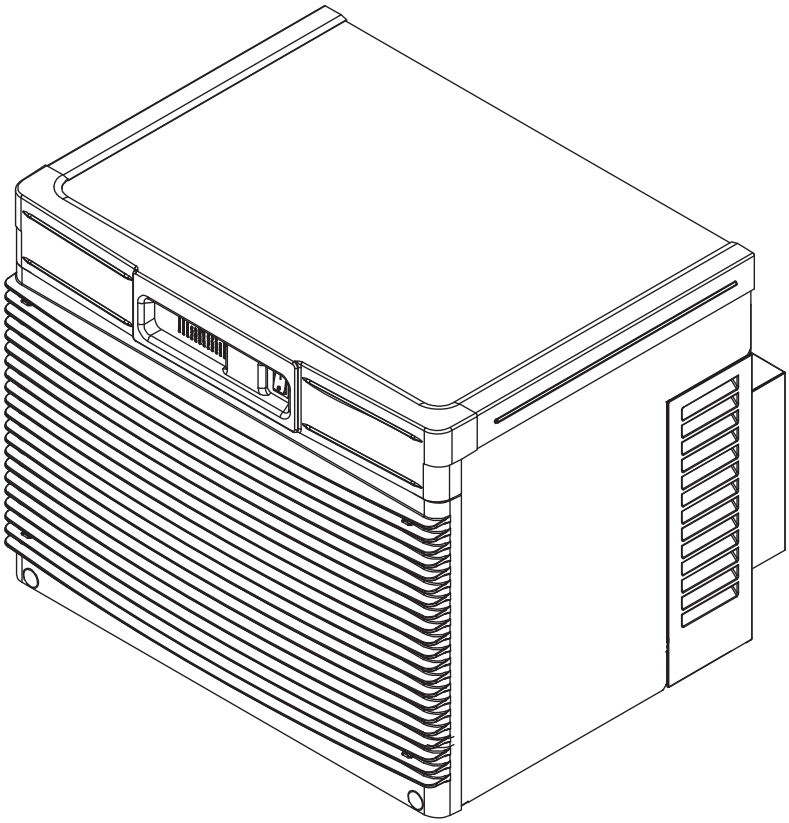

Following installation, please forward this manual to the appropriate operations person.

Innovative solutions, inspired by ice

801 Church Lane • Easton, PA 18040, USA
Toll free (877) 612-5086 • +1 (610) 252-7301
www.follettice.com

01096106R02

Contents

Welcome to Follett . . . 3
Before you begin . . . 3
Specifications . . . 4
Operation . . . 7
Preventive maintenance . . . 7
Weekly exterior care . . . 7
Service . . . 11
The Horizon ice machine overview . . . 11
Harvest system diagram . . . 11
Water system diagram . . . 13
Water level diagram . . . 13
Normal control board operation . . . 14
DIP Switch Settings . . . 14
Error faults: . . . 15
Soft errors: . . . 15
Run errors: . . . 15
Evaporator flushing sequence: . . . 15
Wiring diagram . . . 16
Fan motor data . . . 17
Mechanical System . . . 18
Reservoir/rear bushing disassembly . . . 25
1010 - Refrigerant pressure data . . . 26
1410 - Refrigerant pressure data . . . 26
Refrigeration system diagram . . . 26
Refrigeration charge . . . 27
Refrigerant replacement requirements . . . 27
Evacuation . . . 27
Ice capacity test . . . 27
Troubleshooting . . . 28
Replacement parts . . . 30

Welcome to Follett

Follett equipment enjoys a well-deserved reputation for excellent performance, long-term reliability and outstanding after-the-sale support. To ensure that this equipment delivers the same degree of service, we ask that you review the installation manual (provided as a separate document) before beginning to install the unit. Our instructions are designed to help you achieve a trouble-free installation. Should you have any questions or require technical help at any time, please call our technical service group at (877) 612-5086 or +1 (610) 252-7301.

Before you begin

After uncrating and removing all packing material, inspect the equipment for concealed shipping damage. If damage is found, notify the shipper immediately and contact Follett Corporation so that we can help in the filing of a claim, if necessary.

Check your paperwork to determine which model you have. Follett model numbers are designed to provide information about the type and capacity of Follett equipment. Following is an explanation of the different model numbers in the series.

Chewblet® Ice Machine Model Number Configurations

HC D 1810 A V S

Icemaker	Voltage	Series	Condenser	Application	Configuration
MC Maestro™ Chewblet® (425 Series) HC Horizon Chewblet (710, 1010, 1410, 1810, 2110 Series) HM Horizon Micro Chewblet	C 208-230/60/1 (icemaking head) *Self-contained only.* D 115/60/1 (icemaking head) *Self-contained and remote. If remote unit, high side is 208-230/60/1.* E 230/50/1 (icemaking head) *Self-contained only.* F 115/60/1 (icemaking head) *Remote only. High side is 208-230/60/3.*	425 up to 425 lbs (193 kg) 710 up to 675 lbs (306 kg) 1010 up to 1061 lbs (482 kg) 1410 up to 1466 lbs (665 kg) 1810 up to 1790 lbs (812 kg) 2110 up to 2039 lbs (925 kg)	A Air-cooled, self-contained W Water-cooled, self-contained R Air-cooled, remote condensing unit N Air-cooled, no condensing unit for connection to parallel rack system	V Vision™ H Harmony™ B Ice storage bin J Drop-in M Ice Manager diverter valve system P Cornelius Profile PR150	S RIDE™ *(RIDE remote ice delivery equipment)* T Top-mount

⚠ CAUTION

- Warranty does not cover exterior or outside installations.
- Moving parts. Do not operate with front cover removed.
- Hot parts. Do not operate with cover removed.
- To reduce risk of shock, disconnect power before servicing.
- Drain line must not be vented.
- Water supply must have particle filtration.
- Most ice machine cleaners contain citric or phosphoric acid, which can cause skin irritation. Read caution label on product and follow instructions carefully.
- Ice is slippery. Maintain counters and floors around dispenser in a clean and ice-free condition.
- Ice is food. Follow recommended cleaning instructions to maintain cleanliness of delivered ice.

Specifications

Electrical

Each ice machine requires its own separate circuit with electrical disconnect within 10 ft (6m). Equipment ground required.

Standard electrical:

- HCC1010: 208-230/60/1 (6 ft (2m) NEMA 6-15 cord and plug provided)
- HCC1410: 208-230/60/1 (6 ft (2m) NEMA 6-20 cord and plug provided)
- Amperage: 1010A/W - 11A
  1410A/W - 14A

Plumbing

⚠ WARNING

This equipment to be installed with adequate backflow protection to comply with applicable federal, state, and local codes.

- 3/8" OD push-in water inlet (connection inside machine) - 3/8" OD tubing required
- 3/4" MPT drain
- 1/4" FPT condenser inlet (water-cooled condenser only)
- 1/4" FPT condenser drain (water-cooled condenser only)

Notes:

- Water shut-off recommended within 10 feet (3m).
- Water supply must have particle filtration. Follett recommends the filter system that has integral scale inhibitors. (Follett item# 00130286).
- Follett does not recommend the use of water softeners or bowl scale inhibitors.

Flush drain plumbing

- 3/4" MPT flush drain connection at the rear of the machine.
- Drain must slope 1/4" inch per foot (6 mm per 30.4 cm).
- Drain line should not be shared with any other piece of equipment.
- Drain line cannot be reduced to a size smaller than 1 inch.
- Drain should be piped without a vent.

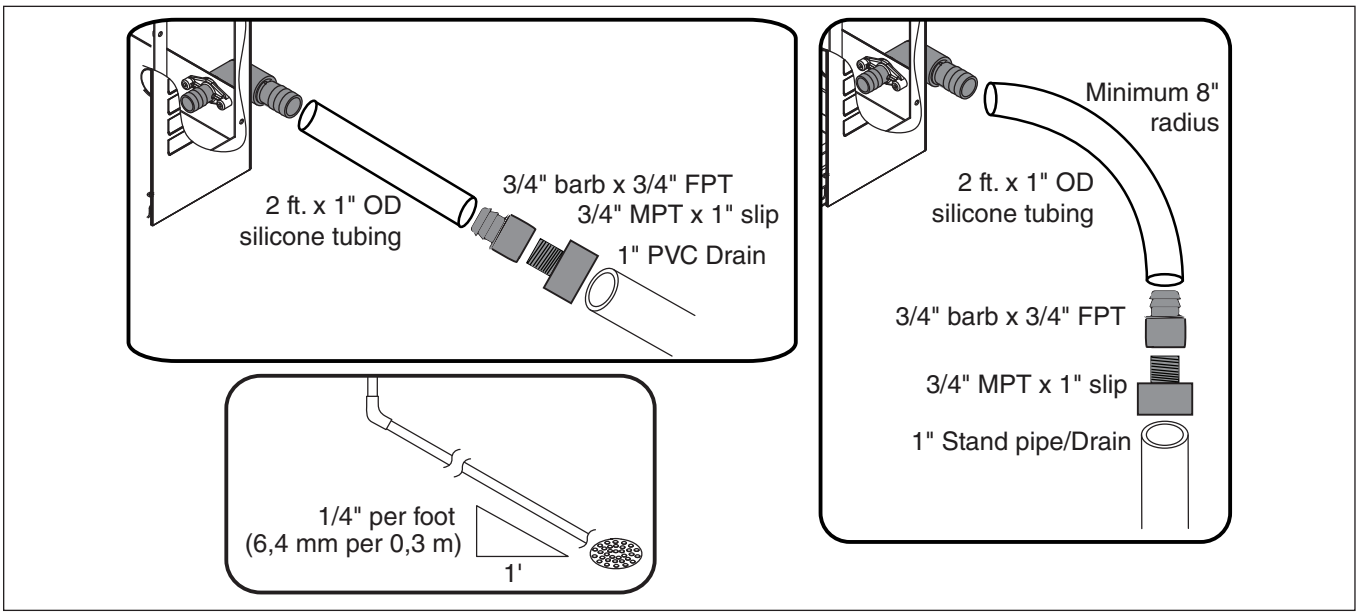

Ambient

Air temperature	100 F/38 C max.	50 F/10 C min.
Water temperature	90 F/32 C max.	45 F/7 C min.
Water pressure – potable	70 psi max. (483 kPa)	10 psi min. (89 kPa)

Note: Water-cooled condenser pressure 150 psi (1034 kPa) max.

Heat rejection

	1010	**1410**
Air-cooled	11,300 BTU/hr	16,000 BTU/hr
Water-cooled	12,800 BTU/hr	16,400 BTU/hr

Ice production

Note: Water regulating valve set to maintain a 260 PSIG (95 F Saturated R404A) discharge pressure at all conditions.

1010 Air-cooled ice machine capacity/24 hrs.

Ambient Air Temperature F/C							
Evap Potable Water Temperature F/C	**F**	**60**	**70**	**80**	**90**	**100**	
	C	**16**	**21**	**27**	**32**	**38**	
	50	1160	1061	962	825	688	**lbs**
	10	526	481	436	374	312	**kg**
	60	1093	1001	909	795	681	**lbs**
	16	496	454	412	361	309	**kg**
	70	1026	941	857	765	674	**lbs**
	21	465	427	389	345	306	**kg**
	80	971	893	815	730	644	**lbs**
	27	440	405	370	331	292	**kg**
	90	917	845	773	694	614	**lbs**
	32	416	383	351	315	279	**kg**

1010 Water-cooled ice machine capacity/24 hrs.

Condenser Water Temperature F/C							
Evap Potable Water Temperature F/C	**F**	**50**	**60**	**70**	**80**	**90**	
	C	**10**	**16**	**21**	**27**	**32**	
	50	1096	1043	1011	947	892	**lbs**
	10	497	473	454	430	405	**kg**
	60	1006	970	938	888	839	**lbs**
	16	456	440	425	403	381	**kg**
	70	917	898	874	830	778	**lbs**
	21	416	407	396	376	353	**kg**
	80	874	888	830	787	749	**lbs**
	27	396	403	376	357	340	**kg**
	90	831	807	778	745	712	**lbs**
	32	377	366	353	338	323	**kg**

1410 Air-cooled ice machine capacity/24 hrs.

Ambient Air Temperature F/C							
Evap Potable Water Temperature F/C	**F**	**60**	**70**	**80**	**90**	**100**	
	C	**16**	**21**	**27**	**32**	**38**	
	50	1593	1466	1339	1230	1121	**lbs**
	10	723	665	609	558	508	**kg**
	60	1518	1396	1275	1163	1052	**lbs**
	16	689	633	578	528	477	**kg**
	70	1442	1327	1211	1097	982	**lbs**
	21	654	602	549	498	445	**kg**
	80	1394	1272	1150	1050	950	**lbs**
	27	632	577	522	476	431	**kg**
	90	1345	1217	1089	1004	918	**lbs**
	32	610	552	494	455	416	**kg**

1410 Water-cooled ice machine capacity/24 hrs.

Condenser Water Temperature F/C							
Evap Potable Water Temperature F/C	**F**	**50**	**60**	**70**	**80**	**90**	
	C	**10**	**16**	**21**	**27**	**32**	
	50	1393	1368	1343	1328	1313	**lbs**
	10	632	621	609	602	596	**kg**
	60	1374	1326	1278	1268	1257	**lbs**
	16	623	601	580	575	570	**kg**
	70	1335	1284	1213	1207	1201	**lbs**
	21	606	582	550	547	545	**kg**
	80	1278	1216	1153	1135	1116	**lbs**
	27	580	552	523	515	506	**kg**
	90	1201	1147	1093	1063	1032	**lbs**
	32	545	520	496	482	468	**kg**

Dimensions and clearances

- Entire front of ice machine must be clear of obstructions/connections to allow removal.
- 1" (26mm) clearance above ice machine for service.
- 1" (26mm) minimum clearance on sides.
- The intake and exhaust air grilles must provide at least 250 sq in (1615 sq cm) of open area.
- Air-cooled ice machines – 18" (458 mm) minimum clearance between discharge and air intake-grilles.

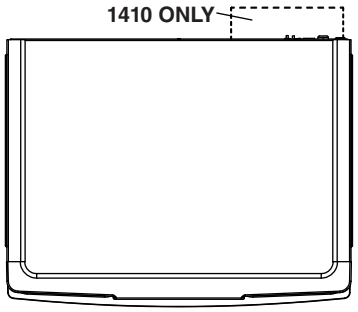

ICE–MAKER TOP VIEW

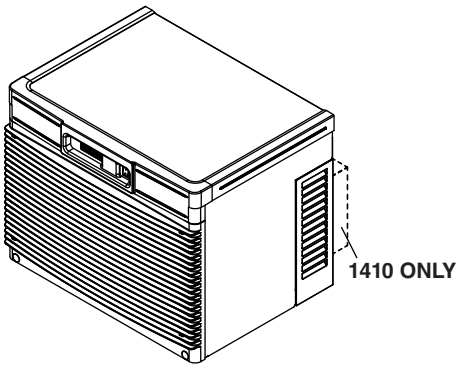

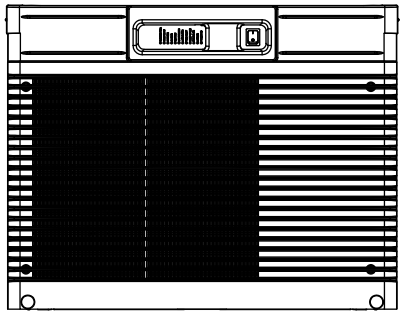

ICE–MAKER FRONT VIEW

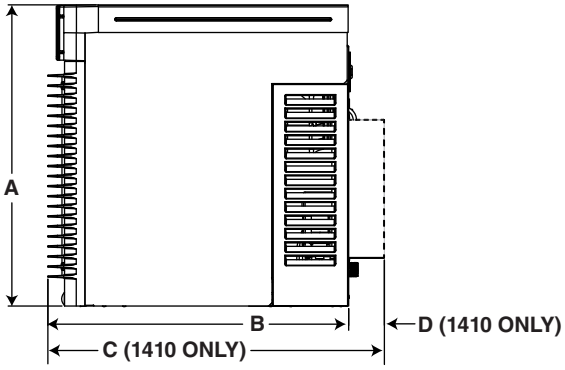

ICE–MAKER SIDE VIEW

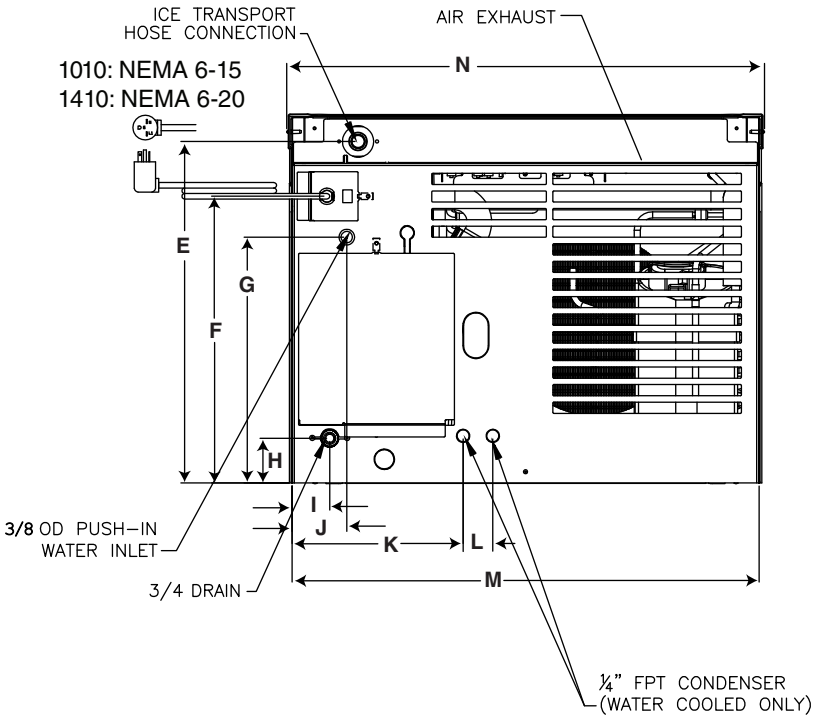

ICE–MAKER BACK VIEW

A	22.51" (57.2 cm)
B	22.48" (57.1 cm)
C	25.15" (56.3 cm)
D	2.66" (6.8 cm)
E	20.84" (52.9 cm)
F	17.49" (44.4 cm)
G	15.00" (38.1 cm)
H	2.73" (6.9 cm)
I	2.30" (5.8 cm)
J	3.34" (8.5 cm)
K	10.44" (26.5 cm)
L	1.81" (4.6 cm)
M	28.50" (72.4 cm)
N	29.15" (74.0 cm)

Operation

Cleaning/sanitizing and preventive maintenance (all models)

Note: Do not use bleach to sanitize or clean the icemaker.

Preventive maintenance

Periodic cleaning of Follett's icemaker system is required to ensure peak performance and delivery of clean, sanitary ice. The recommended cleaning procedures that follow should be performed at least as frequently as recommended, and more often if environmental conditions dictate.

Cleaning of the condenser can usually be performed by facility personnel. Cleaning of the icemaker system, in most cases, should be performed by your facility's maintenance staff or a Follett authorized service agent. Regardless of who performs the cleaning, it is the operator's responsibility to see that this cleaning is performed according to the schedule below. Service problems resulting from lack of preventive maintenance will not be covered under the Follett warranty.

Weekly exterior care

The exterior may be cleaned with a stainless cleaner such as 3M Stainless Steel Cleaner & Polish or equivalent.

Monthly condenser cleaning (air-cooled icemaker only)

1. Use a vacuum cleaner or stiff brush to carefully clean condenser coils of air-cooled icemakers to ensure optimal performance.
2. When reinstalling counter panels in front of remote icemakers, be sure that ventilation louvers line up with condenser air duct.

Semi-annual evaporator cleaning (every 6 months)

⚠ WARNING

- Wear rubber gloves and safety goggles (and/or face shield) when handling ice machine cleaner or sanitizer.

⚠ CAUTION

- Use only Follett approved SafeCLEAN Plus™ cleaning/sanitizing solution (part #01050863).
- DO NOT USE BLEACH.
- It is a violation of Federal law to use these solutions in a manner inconsistent with their labeling.
- Read and understand all labels printed on packaging before use.

Note: Complete procedure for cleaning an sanitizing MUST be followed. Ice must be collected for 10 minutes before putting ice machine back into service.

1. Press the CLEAN button. The machine will drain. The auger will run for a short time and then stop. Wait for the LOW WATER light to come on.

Fig. 1

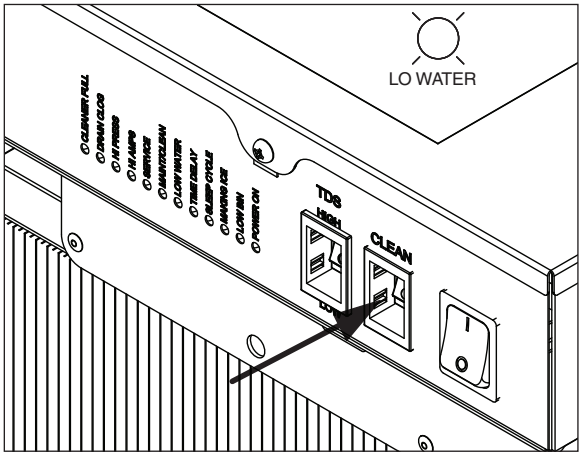

2. Mix 1 gal. (3.8L) 120 F (49 C) water and one 7 oz. (198 g) packet of Follett SafeClean Plus (P/N 01050863).
3. Using a 1 quart (1L) container, slowly fill cleaning cup until CLEANER FULL light comes on. Do not overfill.
4. Place one Sani-Sponge™ in remaining sanitizing and cleaning solution and retain for Step 9.

Note: Do not use bleach to sanitize or clean the icemaker.

Fig. 2

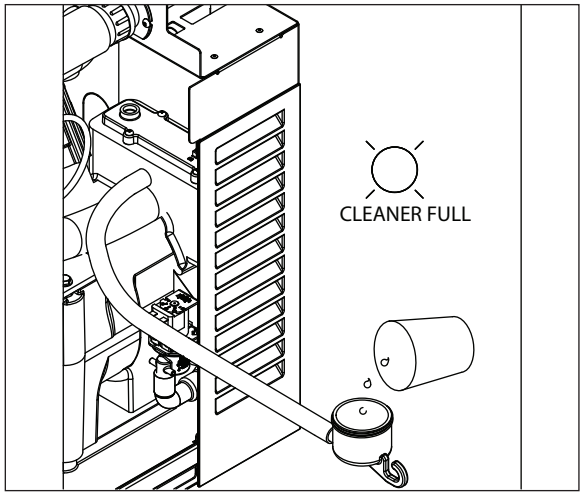

5. Replace cover on cleaner cup. Machine will clean, then flush 3 times in approximately 15 minutes. Wait until machine restarts.

Fig. 3

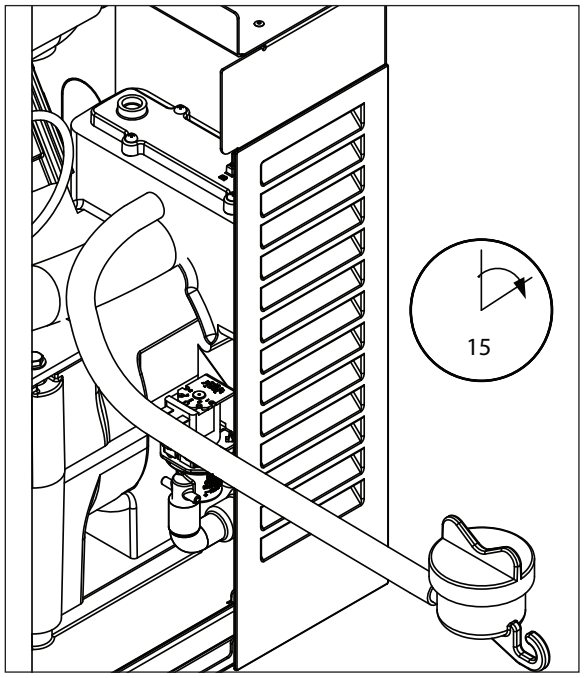

6. To clean/sanitize ice transport tube – Press power switch OFF

Fig. 4

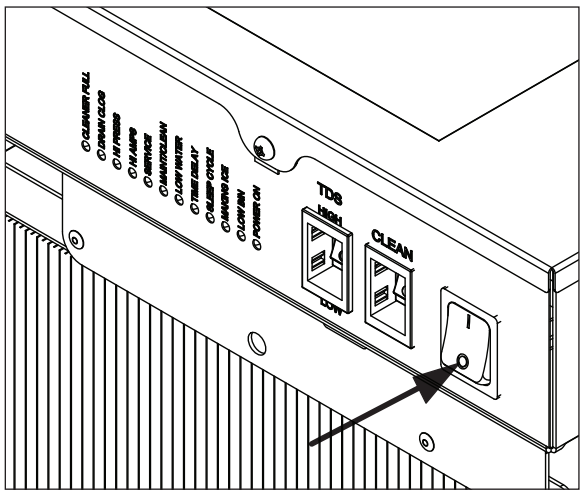

7. Disconnect coupling as shown.

Fig. 5

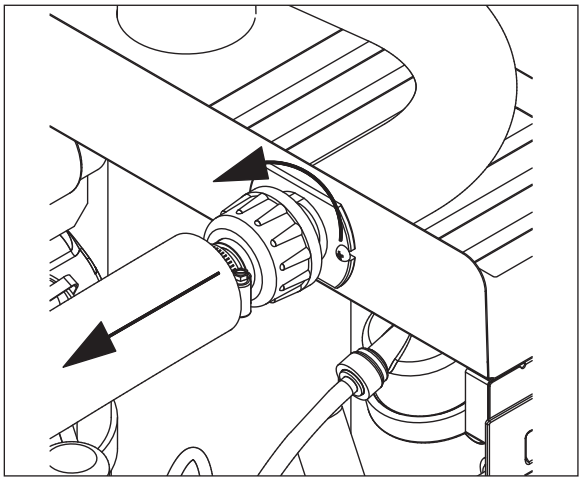

8. Using disposable food service grade gloves, insert dry Sani-Sponge.
9. Insert Sani-Sponge soaked in SafeClean Plus (from Step 4).
10. Push both Sani-Sponges down ice transport tube with supplied pusher tube.

Fig. 6

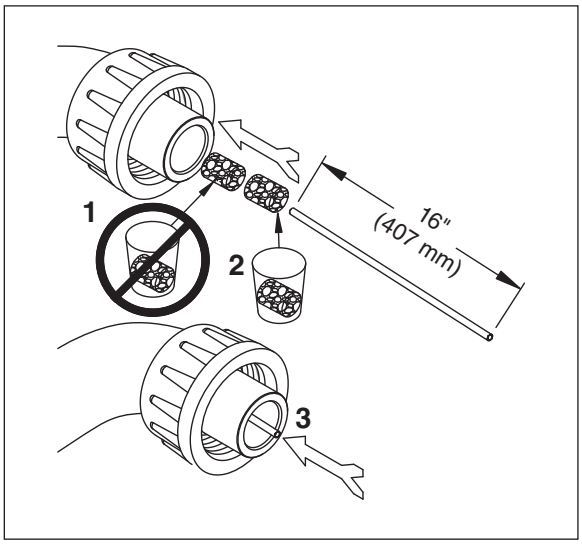

11. Remove and discard 16 inch (407 mm) pusher tube.

Fig. 7

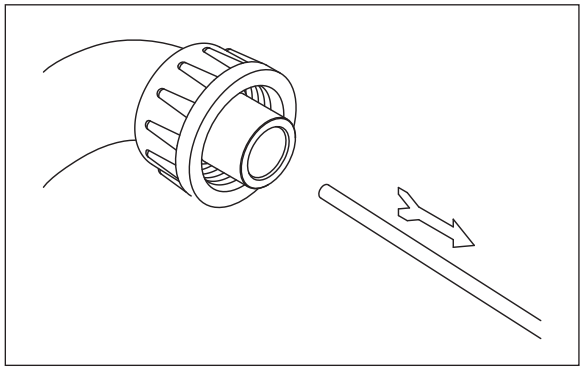

12. Reconnect coupling. Press power switch ON. Ice pushes Sani-Sponges through ice transport tube.

Fig. 8

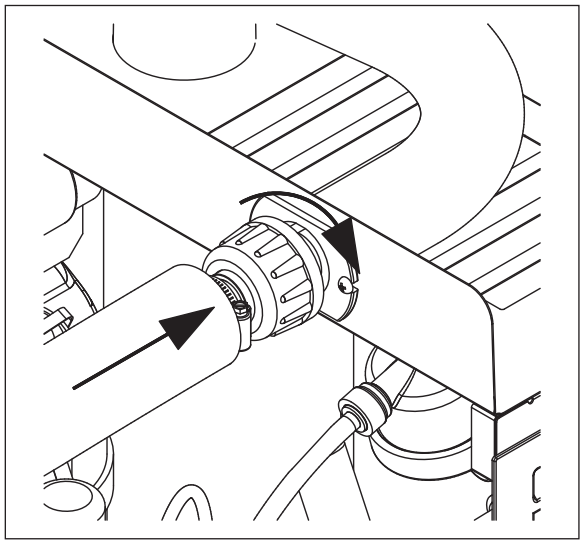

13. Place a sanitary (2 gal. or larger) container in bin or dispenser to collect Sani-Sponges and ice for 10 minutes.

14. Collect 5.5 lbs (3 kg) of ice from unit. Discard ice and Sani-Sponges.

Fig. 9

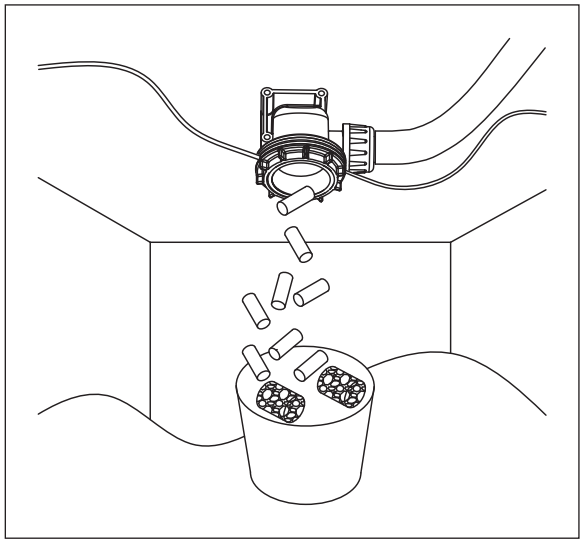

Service

Ice machine operation (all models)

Follett's ice machine consists of five distinct functional systems covered in detail as follows:

- Water system
- Electrical control system
- Mechanical assembly
- Refrigeration system
- Bin full

The Horizon ice machine overview

The Follett Horizon ice machine uses a horizontal, cylindrical evaporator to freeze water on its inner surface. The refrigeration cycle is continuous; there is no batch cycle. The evaporator is flooded with water and the level is controlled by sensors in a reservoir. A rotating auger (17 RPM) continuously scrapes ice from the inner wall of the evaporator. The auger moves harvested ice through the evaporator into an ice extrusion canal. The ice is forced through a restrictive nozzle that squeezes out the water and creates the Chewblet. The continuous extrusion process pushes the Chewblets through a transport tube into a dispenser or bin.

A solid state PC board controls and monitors the functionality of the ice machine. In addition to sequencing electrical components, the board monitors various operational parameters. A full complement of indicator lights allows visual status of the machine's operation. Additionally, the PC board controls the self-flushing feature of the ice machine. The evaporator water is periodically drained and replenished to remove minerals and sediment.

A unique "bin full" detection system is incorporated in the Horizon ice machine. A switch located at the ice discharge port of the machine detects the position of the transport tube. When the bin fills up with ice, the transport tube moves out of the normal running position, and the switch turns the ice maker off. A domed housing at the end of the transport tube contains the ice extrusion loads during shut down.

Harvest system diagram

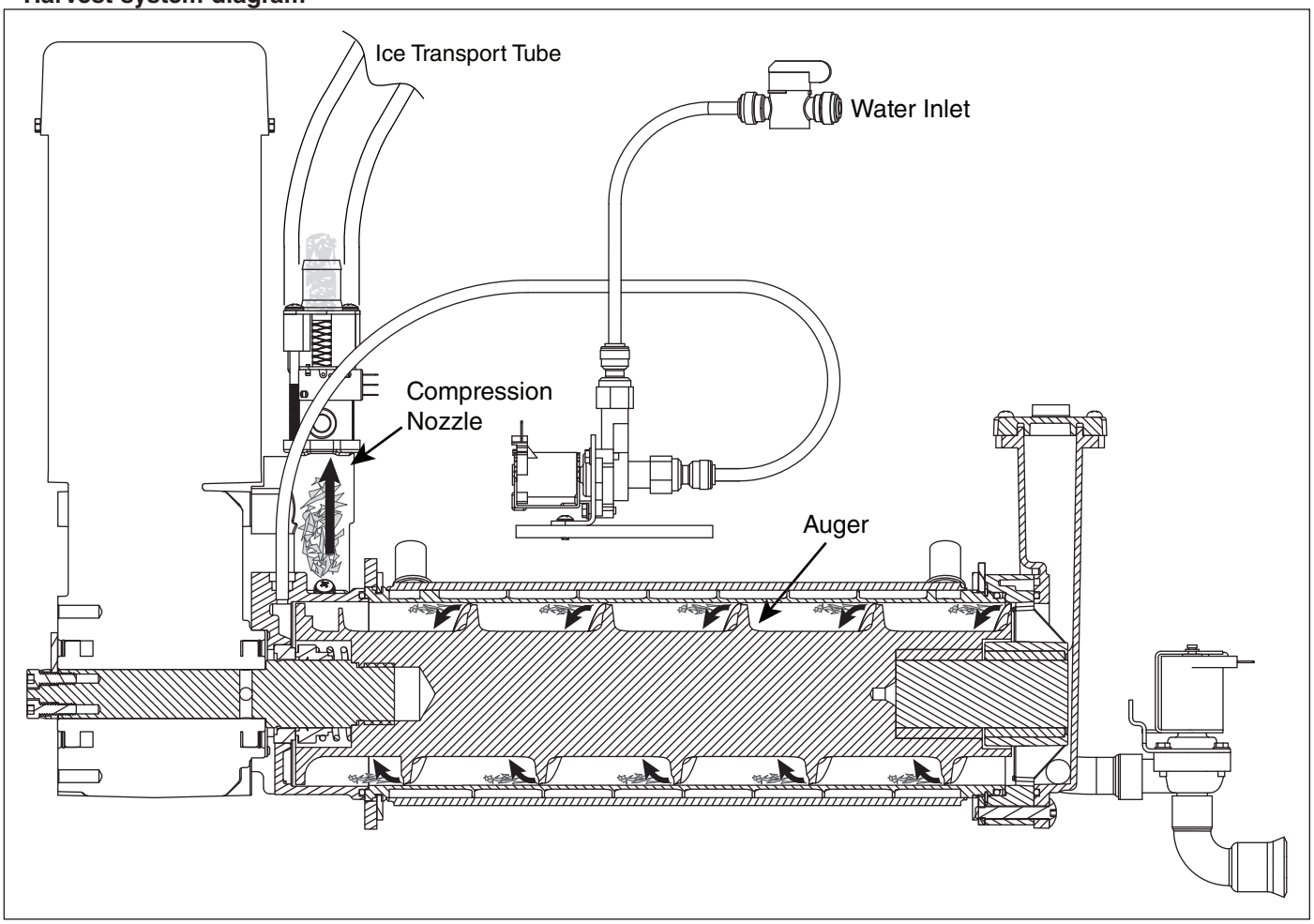

“Bin full” detection system

The Follett Horizon ice machine incorporates a unique “bin full” detection system that consists of the shuttle and actuator. The shuttle incorporates a flag and switch. Referencing the figure below, the normal running position of the flag is down, and the switch is closed. When the bin fills to the top and ice can no longer move through the tube, the machine will force the shuttle flag up, opening the switch and shutting the machine off. The shuttle actuator, located above the ice bin allows the ice to curl up within it when the bin is full. In this way, there are no loads generated that would tend to lift off the lid of the bin.

Shuttle flag and sensor

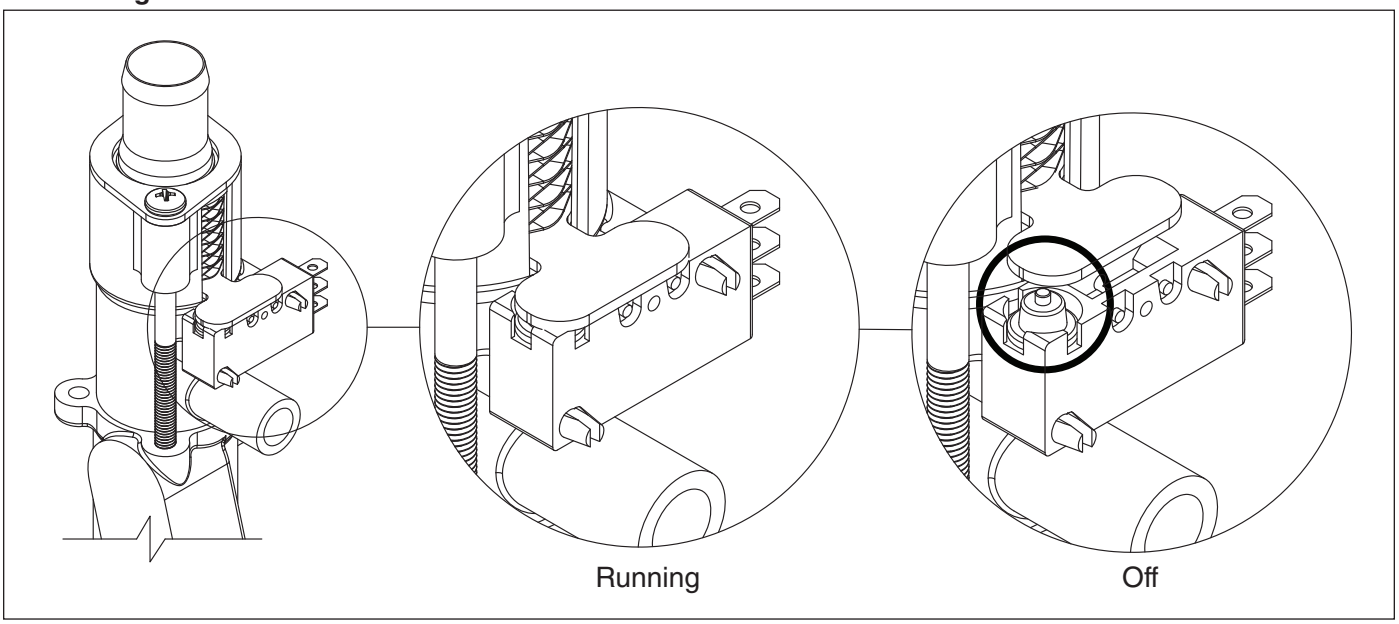

Shuttle actuator

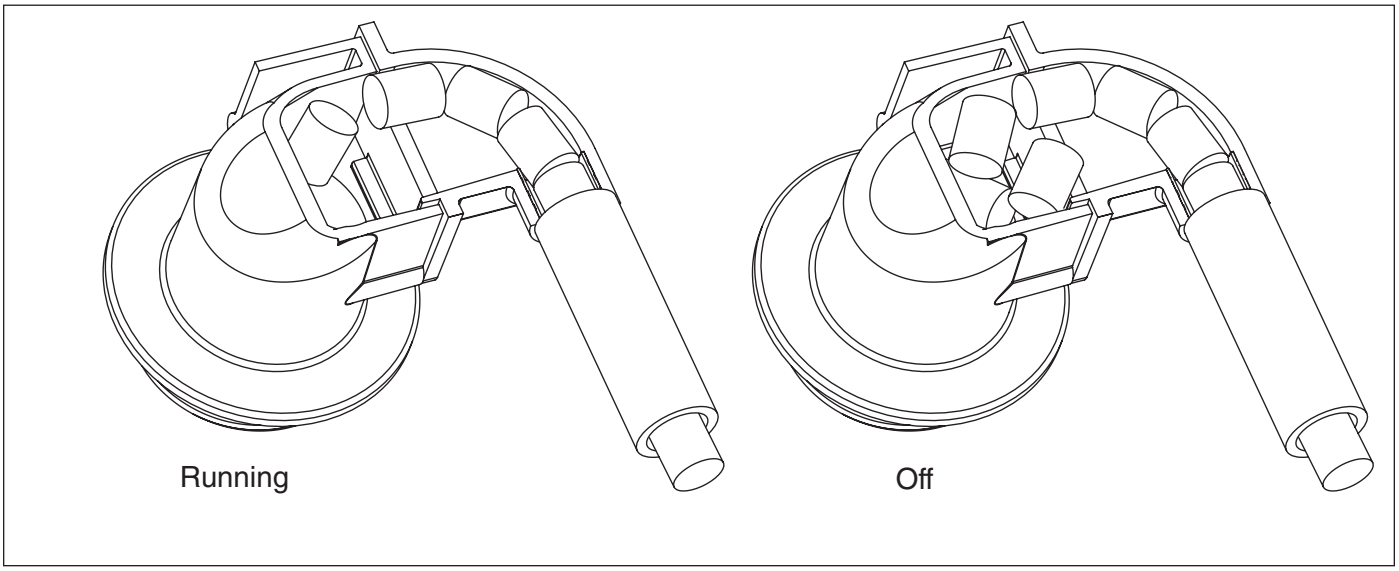

Water system

The water level in the evaporator is controlled by a feed solenoid and level detecting sensors. Referencing the diagram below, water sensing probes extend down into the reservoir at the end of the evaporator assembly. The system works via electrical conductivity as follows:

The probe labeled B is the common. When water is between any of the other probes and the common, the PC board will sense the activation. During normal operation, the water level rises and falls between the Normal High and Normal Low probes. As water is consumed to make ice, the level will fall until the Normal Low probe is exposed, triggering the water feed solenoid on. Water will fill until the Normal High sensor is activated.

Note: The potable water total dissolved solids (TDS) content must be greater than 10 ppm for the water control system to function properly. If using reverse osmosis water filtration system, ensure TDS level is greater than 10 ppm.

Water system diagram

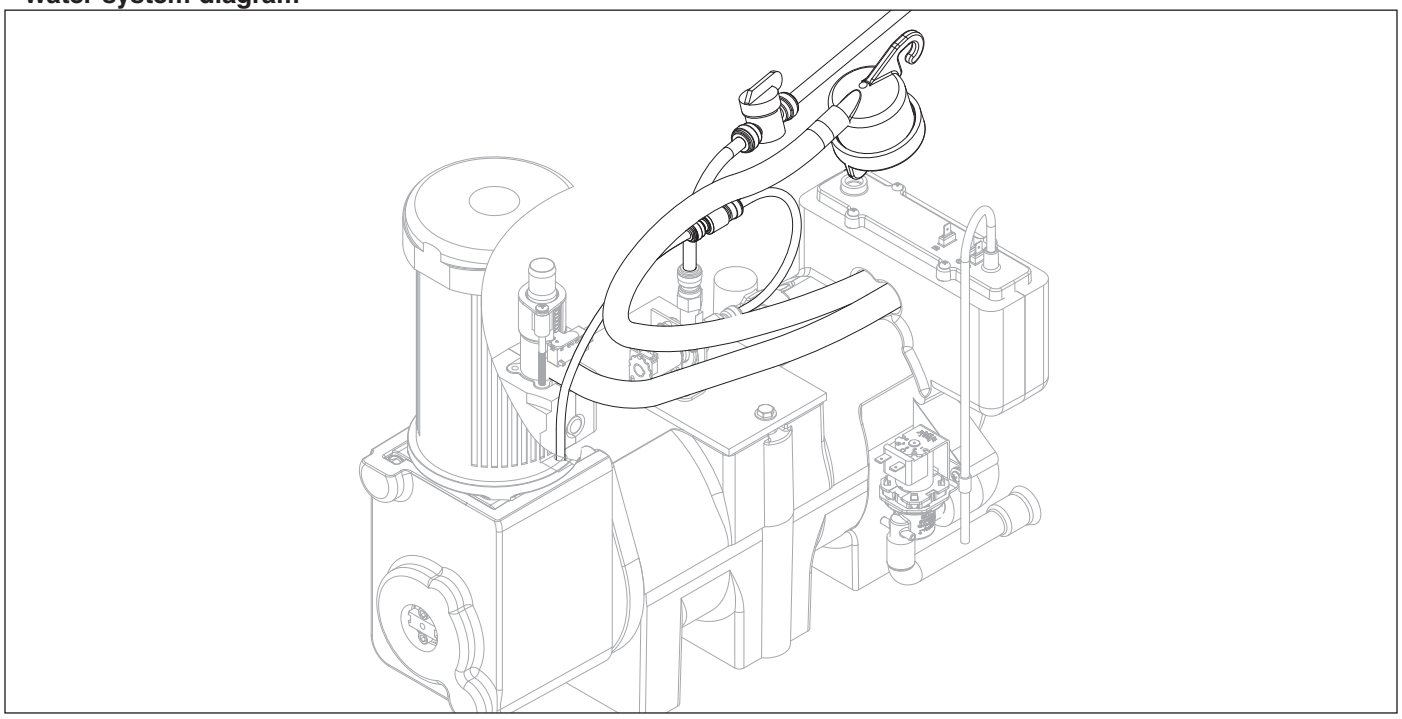

Water level diagram

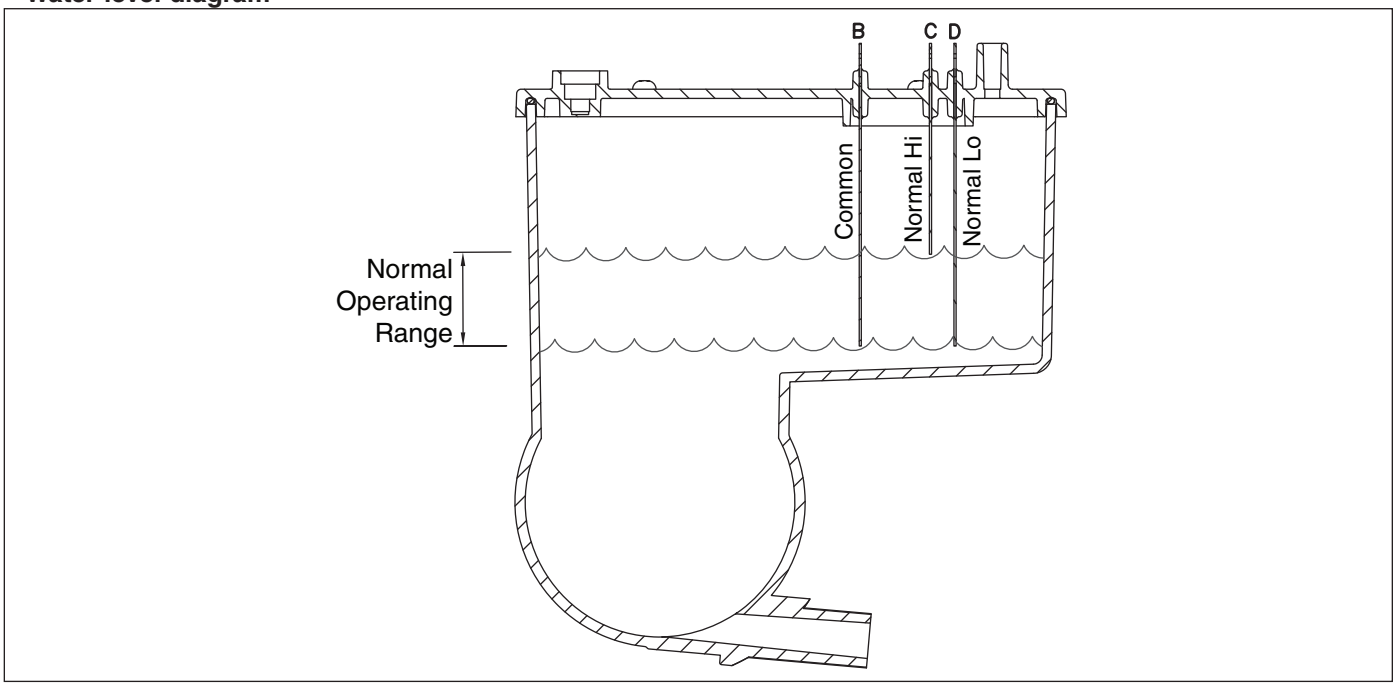

Electrical system

ATTENTION!

To prevent circuit breaker/Hi-amp overload, wait 5 minutes before restarting this unit. This allows the compressor to equalize and the evaporator to thaw.

Normal control board operation

The PC board indicator lights provide all the information necessary to determine the machine's status. Green indicator lights generally represent “go” or normal operation; Yellow indicators represent normal off conditions; Red indicators generally represent alarm conditions, some of which will lock the machine off.

A flashing green light labeled POWER indicates power to the machine. All other normal operation status indicators are covered as follows:

Ice machine disposition	Operating conditions
Legend: ● ON ○ OFF ◐ ON or OFF ⊗ FLASHING	
1. Ice machine is making ice. CLEANER FULL ○ DRAIN CLOG ○ HI PRESS ○ HI AMPS ○ SERVICE ○ MAINT/CLEAN ○ LOW WATER ○ TIME DELAY ○ NOT USED ○ MAKING ICE ● LOW BIN ● POWER ON ⊗	1. **Normal running.**
2. Ice machine is not making ice. CLEANER FULL ○ DRAIN CLOG ○ HI PRESS ○ HI AMPS ○ SERVICE ○ MAINT/CLEAN ○ LOW WATER ○ TIME DELAY ● NOT USED ○ MAKING ICE ○ LOW BIN ◐ POWER ON ⊗	2. **Normal time delay.** When the bin fills with ice, the LOW BIN light goes out momentarily and the refrigeration and auger drive systems immediately shut down. (**Note:** The fan motor will continue to run for 10 minutes to cool condenser) The TIME DELAY light comes on, initiating the time delay period. When the time delay expires, the machine will restart provided that the LOW BIN light is on.

DIP Switch Settings

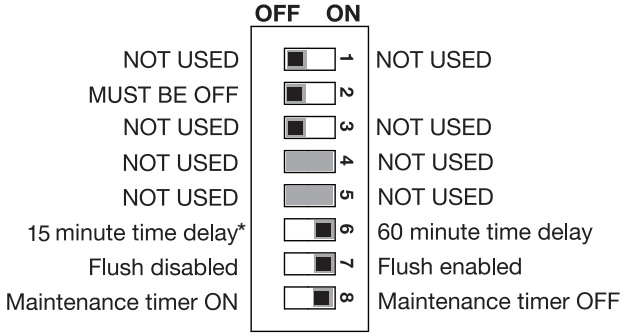

* Ice manager only.

Error faults:
The Horizon PC board monitors various operating parameters including high pressure, auger gearmotor amperage limits, clogged drain, and low water alarm conditions. There are three types of errors namely “soft” (time delay) "hard" (reset), and “run”.

- Soft errors will automatically reset after the 1 hour time delay or can be reset by cycling power.
- Hard errors must be reset on the control board.
- Run errors will give an indication of a problem, but will allow continuous normal operation.

Soft errors:
HI AMPS: The PC board monitors the amperage of the auger motor. Should the gear motor experience current draw above the allowable limit, the machine will shut down and the TIME DELAY and HI AMP will be illuminated. After the time delay the machine will restart and the TIME DELAY and HI AMP will clear.

LO WATER: During operation, the water level cycles between the normal low and normal high sensors. Should the water be shut off to a running machine, a soft error will occur. The error sequence is as follows: During operation, the water level falls to the normal low sensor, and when it does the water feed solenoid is energized. If water is not detected at the normal low sensor within 10 seconds, a soft error will occur. The machine will shut down, but the water feed solenoid will remain energized. Should water return, it will fill to the normal low sensor and the machine will resume normal operation. The error will clear automatically.

HI PRESSURE: Should the refrigeration pressure rise above 425 psi, the machine will shut down and the TIME DELAY and HIGH PRESSURE will be illuminated. After the time delay, and if the pressure has fallen back below the reset point of 295 psi, the machine will restart and the TIME DELAY and HIGH PRESSURE will clear.

Hard error:
DRAIN CLOG: The drain clog sensor, located in the chassis will detect the presence of water just below the top edge of the chassis. After the sensors are dried off, the machine must be reset on the control board to resume operation.

Run errors:
DRAIN CLOG: When the machine shuts down on a full bin and there has been 30 minutes of cumulative compressor run time, the machine will purge before starting. During this purge, if water does not get below the low probe in the reservoir within 20 seconds, the Drain Clog LED will light. The machine will continue to run but this is an indication of a poorly draining machine and must be addressed.

Relay output indication:
Each relay on the board has an indicator light associated with its output. For example, when the relay for the water feed solenoid is energized, the adjacent indicator light glows green.

Evaporator flushing sequence:
During operation, the purge solenoid will open in order to drain water. There are two drain settings to choose from: High TDS or Low TDS. (There is a rocker switch behind the front cover of the machine.) The intent is to drain the Total Dissolved Solids from the machine while it makes ice.

While ice is being made, the TDS of the water in the evaporator increases in TDS concentration. Without periodic draining, the TDS levels will climb to very detrimental levels, levels that will cause scale to form and cause poor machine operation. The Low TDS setting will allow the machine to operate for one hour before going through the flushing sequence; the High TDS setting will allow the machine to run for 10 minutes before going through the flushing sequence.

The flushing sequence toggles the purge and fill solenoids three times. That is, the purge solenoid will energize until the water level drops below the low probe. The fill solenoid then energizes until water reaches the high probe, and so on for 3 cycles.

Typically, High TDS might be considered levels above 200 PPM, but local experience and varying water chemistry may compel a High TDS setting for best performance in even lower TDS levels.

Off cycle: At the completion of off-cycle time delay, the machine checks for a cumulative 30 minutes of ice making time since the last **off-cycle** flush. If the cumulative ice making time exceeds 30 minutes, the machine will open the drain valve for 60 seconds to drain the evaporator in its entirety. It will then refill with water and begin making ice. If the ice making time is less than 30 minutes, the machine will start and begin making ice without draining the evaporator.

Wiring diagram

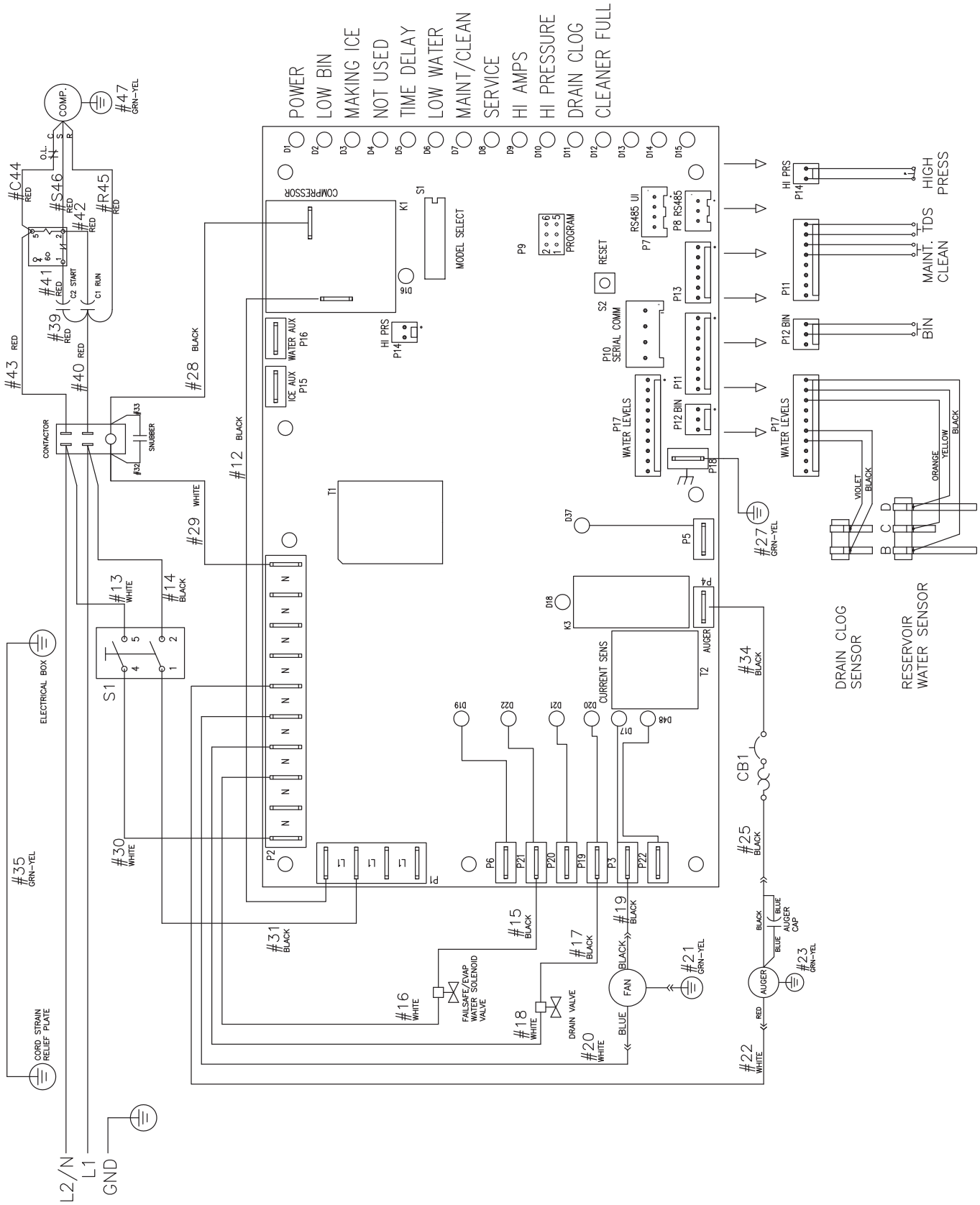

Compressor data

	1010	1410
Compressor current draw at 208-230 VAC, 90 F/32.2 C	6.9A	12.1A
Locked rotor amps @ 208-230V	40.6A	90A
Compressor start winding (208-230 V)	2.74Ω	2.09Ω
Compressor run winding (208-230 V)	1.52Ω	0.73Ω

Gearmotor data

Gearmotor current 2.0A @ 208-230 V
Gearmotor torque-out (high amp) trip point: 2.8A @ 208-230 V
Locked rotor amps 20A @ 208-230 V

Resistance of windings
208-230 vac gearmotor (Brother):
Red to black: 12Ω
Blue to red: 12Ω
Blue to black: 24Ω

Fan motor data

Fan motor current 1.2A @ 208-230 V
Fan motor resistance 100Ω

Mechanical System

Evaporator disassembly

1. Press CLEAN button to purge evaporator. Turn power OFF when LO WATER lights.
2. Unscrew and disconnect transport tube from louvered docking assembly.

Fig. 10

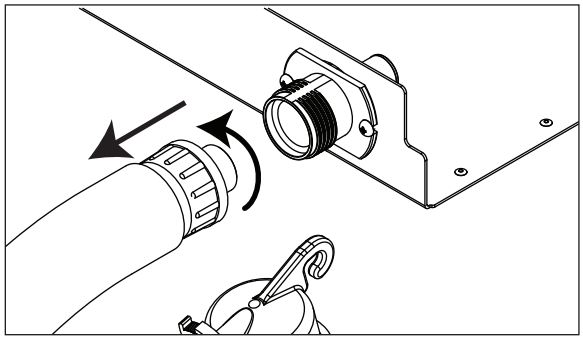

3. Remove gearbox insulation..

Fig. 11

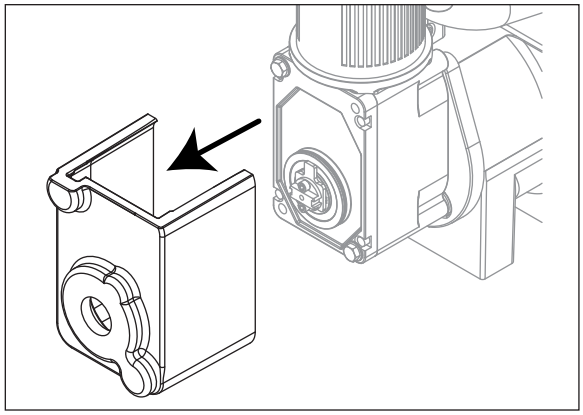

4. Disconnect gear motor wires.

Fig. 12

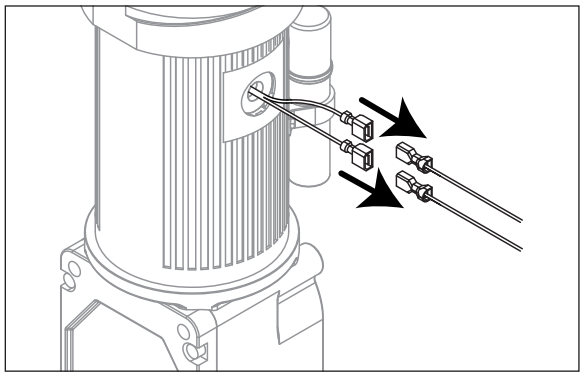

5. Remove screws (with 3/16" allen wrench) and auger retaining fork:

Fig. 13

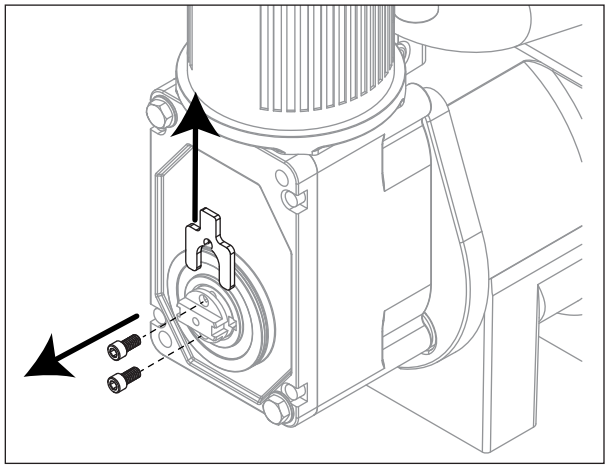

6. Remove gear motor bolts (9/16" wrench).
7. Remove gear motor and wipe auger shaft clean.

Fig. 14

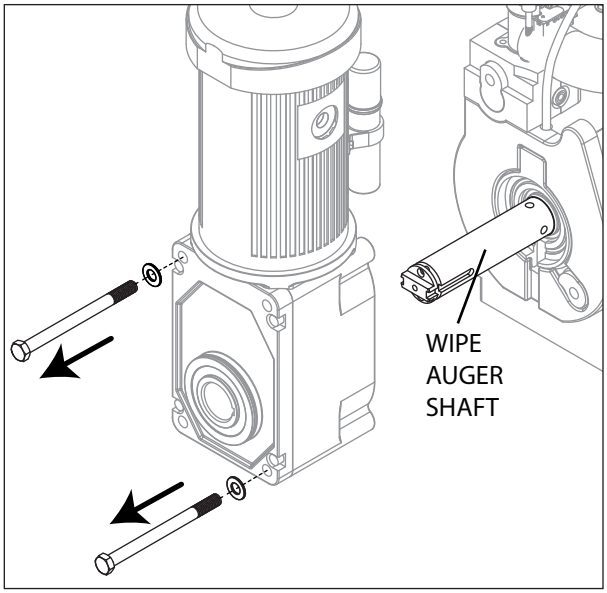

8. Remove main housing insulation and shuttle insulation:

Fig. 15

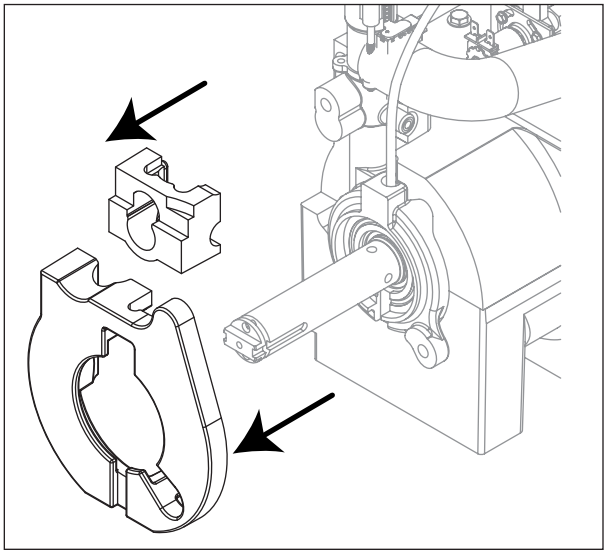

9. Remove front feed water tube from push-in fitting, shuttle drain tube, and shuttle switch.

Fig. 16

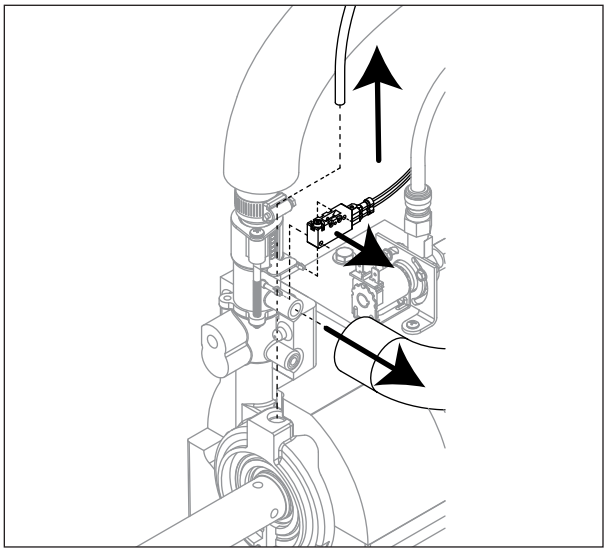

10. Remove 3 screws (with 3/16" allen wrench) then remove auger and main housing together.

Note: Auger is sharp - wear protective gloves.

Fig. 17

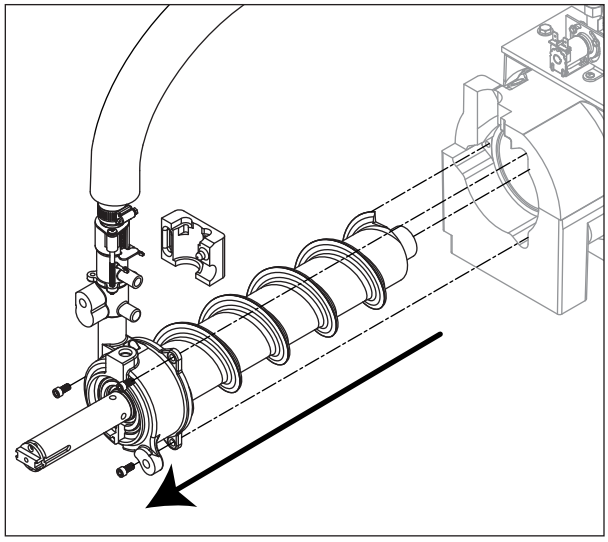

11. Rotate auger to align opening in auger flange with stream divider.

12. Pull out auger.:

Fig. 18

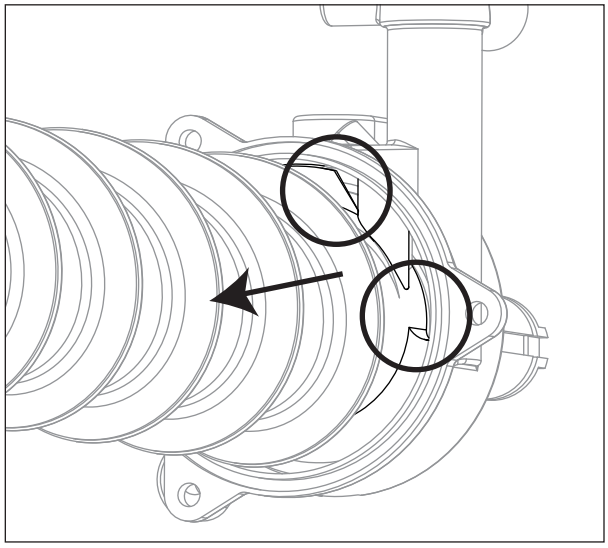

13. Remove and discard the ceramic mating ring and shaft seal.

Fig. 19

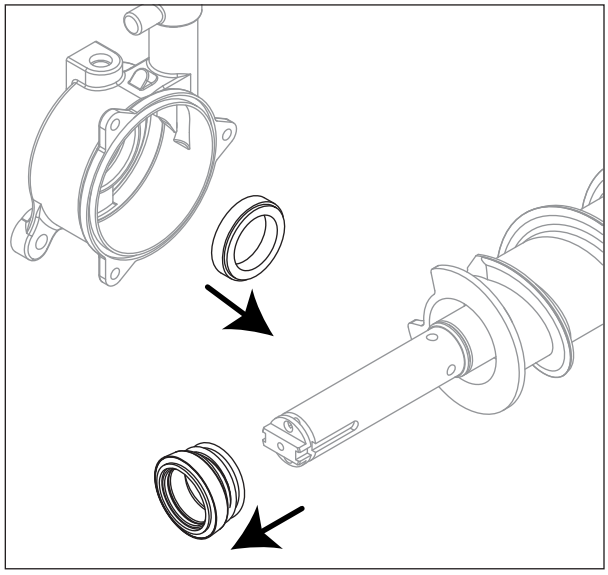

Evaporator reassembly

14. Install ceramic mating ring and shaft seal.

Caution: Do not touch the sealed surface of either part. Oil from bare skin will cause premature seal failure.

15. Use liquid hand soap on the rubber part of the ceramic seal when installing in main housing. Use supplied cardboard disc to press into recess.

16. Apply liquid hand soap to raised area of auger shaft and interior rubber portion of shaft seal before installing seal.

17. Clean O ring groove. Lubricate O ring with petrol-gel and reinstall.

18. Carefully install auger.

19. Rotate auger to position shown to clear main housing stream divider.

20. Install rear shuttle insulation **(Fig. 22.1)** and slide main housing **(Fig. 22.2)** onto auger.

21. When installing new water seal, use screwdriver to compress the spring **(Fig. 22.3)**, which allows for easier installation of the three screws.

Fig. 20

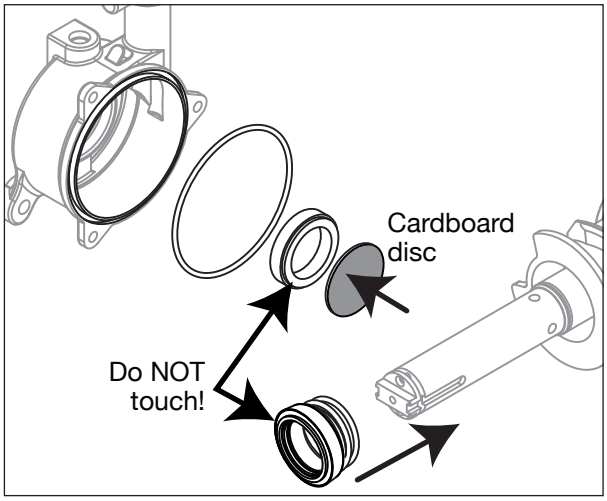

Fig. 21

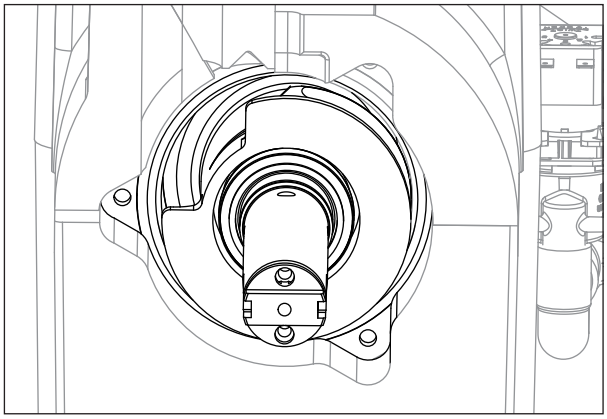

Fig. 22

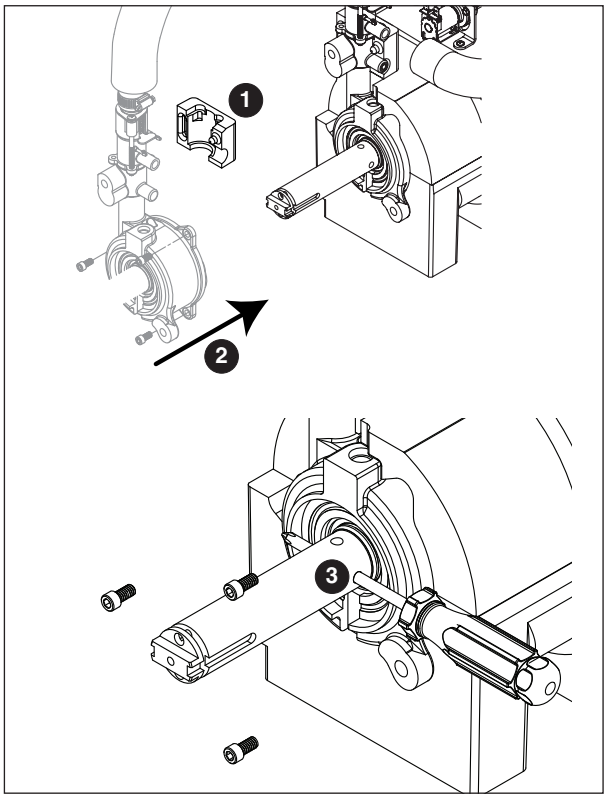

22. Install shuttle switch.

- Align holes with pins **(Fig. 23.1)** and depress switch button **(Fig. 23.2)** to clear shuttle tab.

Fig. 23

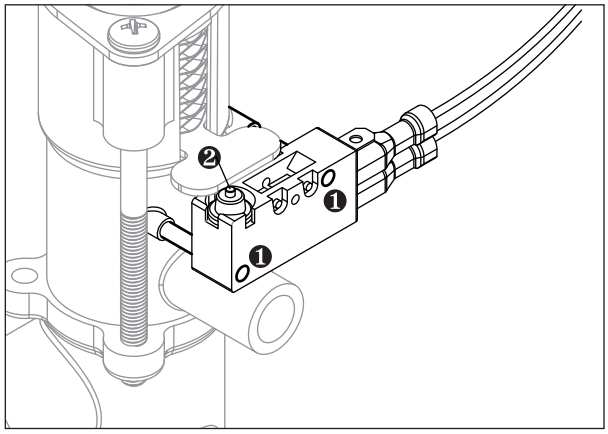

23. Install shuttle drain tube and front feed water tube **(Fig. 24)**.

Fig. 24

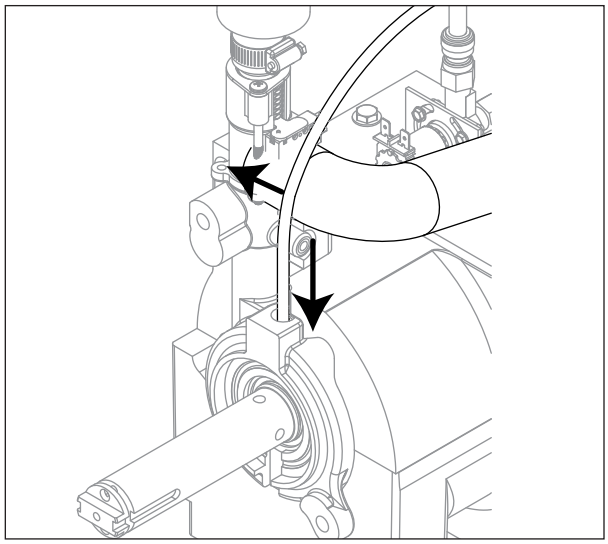

24. Install main housing insulation and shuttle insulation:

25. Apply a coat of petro gel to auger shaft.

Fig. 25

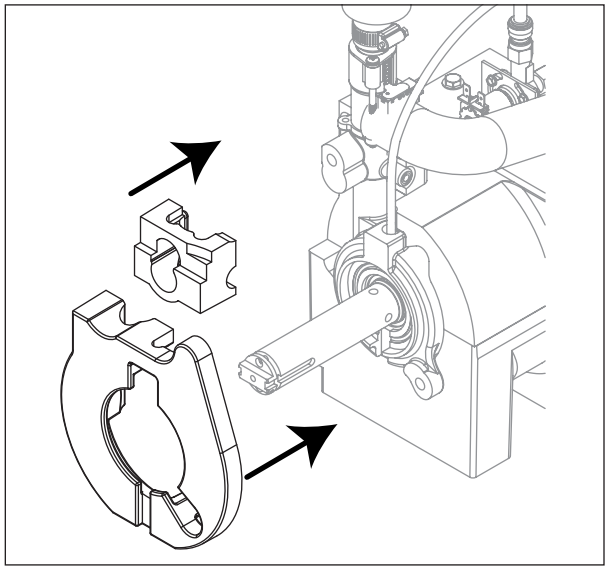

26. Slide gear motor onto auger and install gear motor bolts (9/16" wrench).

Fig. 26

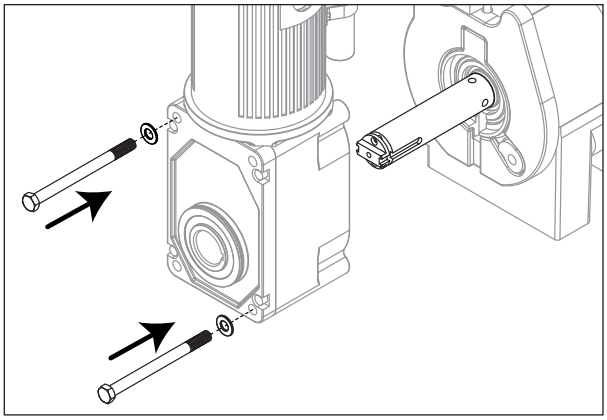

27. Connect gear motor wires.

Fig. 27

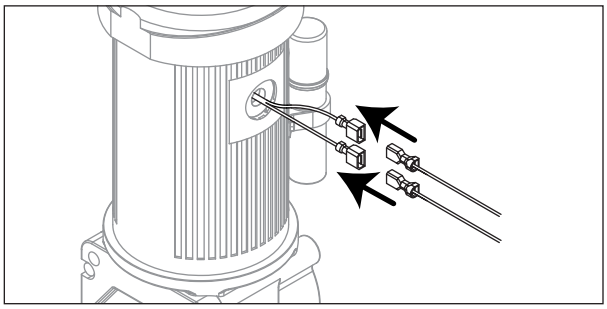

28. Pry auger forward and rotate auger using 1/2" wrench to align keyways.

29. Install key fully.

Fig. 28

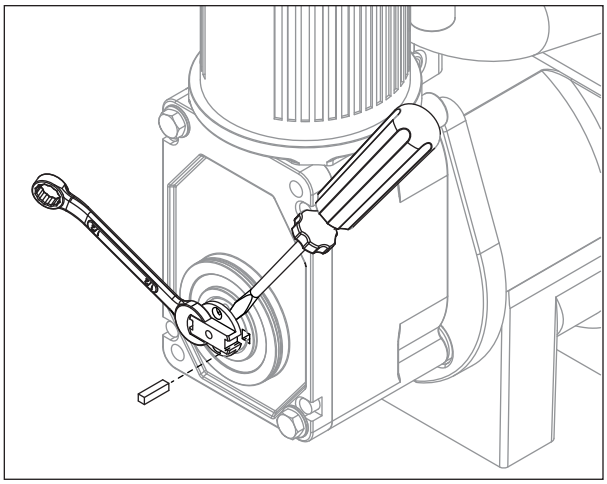

30. Pry shaft forward to install retainer fork.

Fig. 29

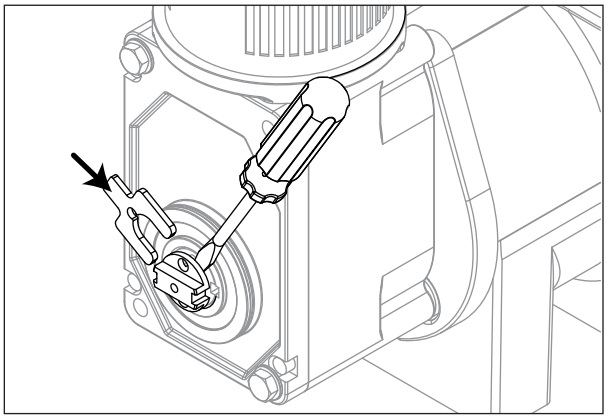

31. Rotate retainer fork to align screw holes.

32. Install screws to secure retainer fork.

Fig. 30

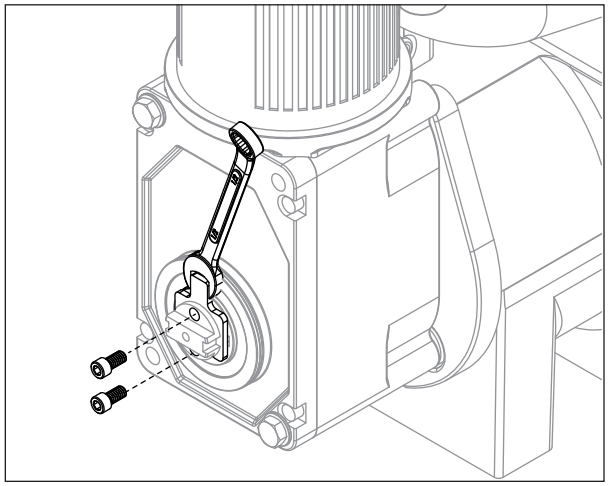

33. Install gearbox insulation.

Fig. 31

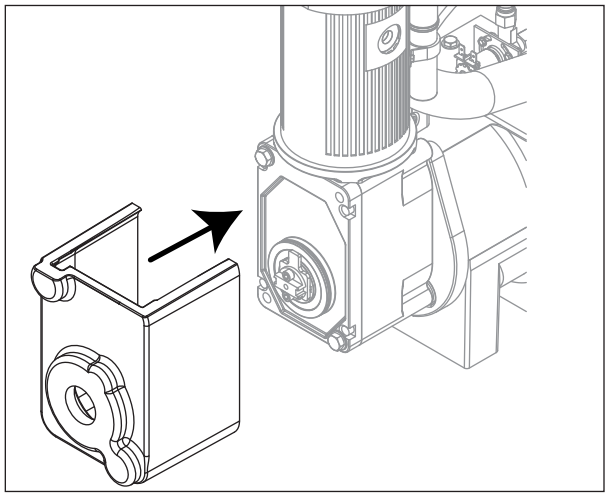

34. Connect transport tube to louvered docking assembly.

Fig. 32

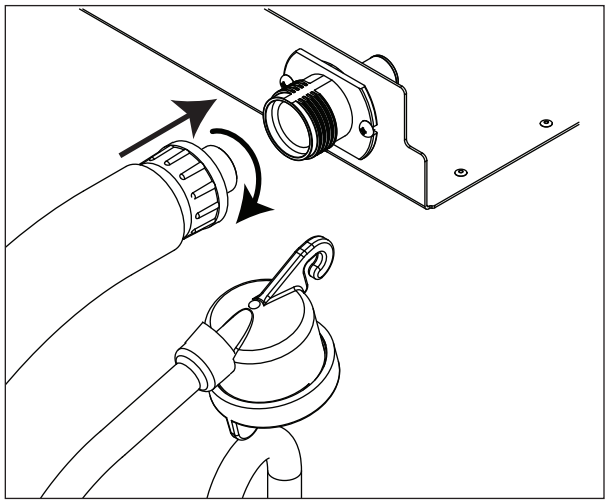

Reservoir/rear bushing disassembly

1. Press CLEAN button to purge evaporator. Turn power OFF when LO WATER lights.

   Note: In many applications, removing the gearmotor, main housing, and auger will allow for the ice machine to be pulled out further for better access to rear components.

2. Slide ice machine forward to gain access.
3. Use Fig. 33 as disassembly guide.

   Note: Use petrogel when installing/reinstalling o-rings.

Fig. 33

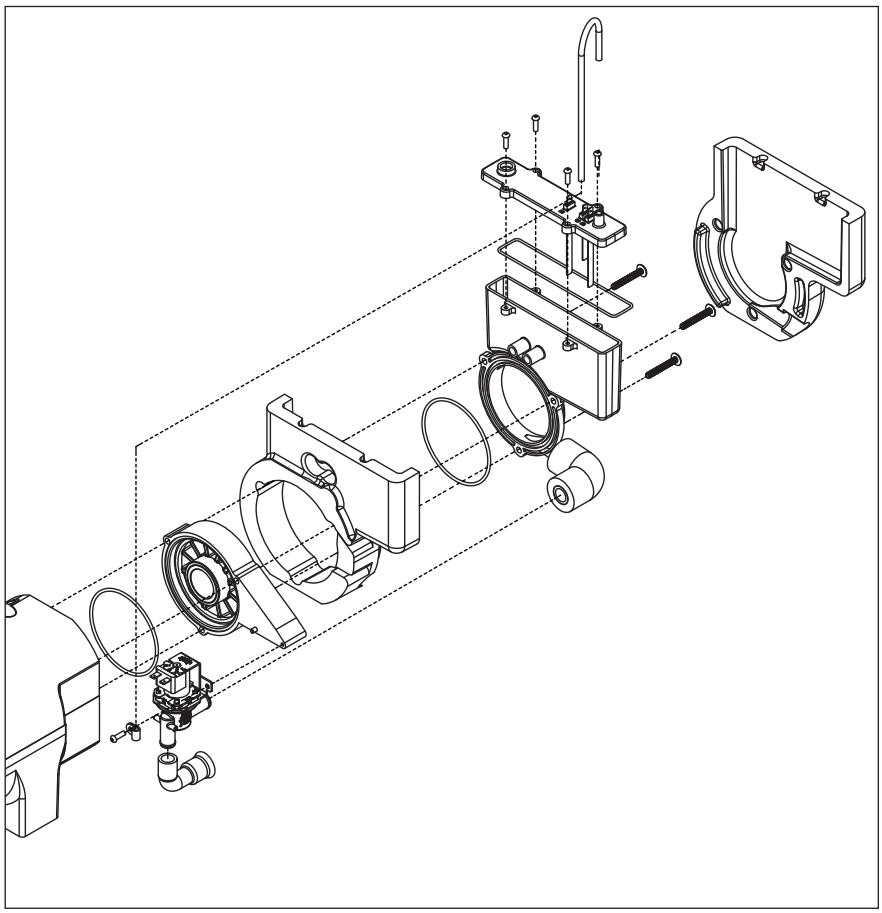

Refrigeration system

1010 - Refrigerant pressure data

Air-cooled condensers (air)	60 F/16 C	70 F/21 C	80 F/27 C	90 F/32 C	100 F/38 C
Pressure (psig) discharge/suction	190/32	225/34	258/36	292/39	325/41

System Operating Pressures (Discharge/Suction) PSIG							
Potable Water F/C							
Condenser Water F/C		50/10	60/16	70/21	80/27	90/32	
	50/10	260/34	260/34	260/34	260/34	260/34	psig
	60/16	260/34	260/34	260/34	260/34	260/34	psig
	70/21	260/35	260/35	260/35	260/35	260/35	psig
	80/27	273/36	284/36	285/36	285/36	285/36	psig
	90/32	285/37	288/37	290/37	290/37	290/37	psig

Note: The water control valve is factory set to maintain 260 ± 15 psi discharge pressure @ 70 F/21 C water.

1410 - Refrigerant pressure data

Air-cooled condensers (air)	60 F/16 C	70 F/21 C	80 F/27 C	90 F/32 C	100 F/38 C
Pressure (psig) discharge/suction	235/27	275/30	315/32	355/35	395/37

System Operating Pressures (Discharge/Suction) PSIG							
Potable Water F/C							
Condenser Water F/C		50/10	60/16	70/21	80/27	90/32	
	50/10	290/32	290/32	290/32	290/33	290/33	psig
	60/16	290/33	290/33	290/33	290/33	290/33	psig
	70/21	290/33	290/33	290/33	290/33	290/33	psig
	80/27	293/33	293/33	293/33	293/33	293/33	psig
	90/32	295/34	295/34	295/34	295/34	295/34	psig

Note: The water control valve is factory set to maintain 290 PSIG ± 15 psi discharge pressure @ 70 F/21 C water.

Refrigeration system diagram

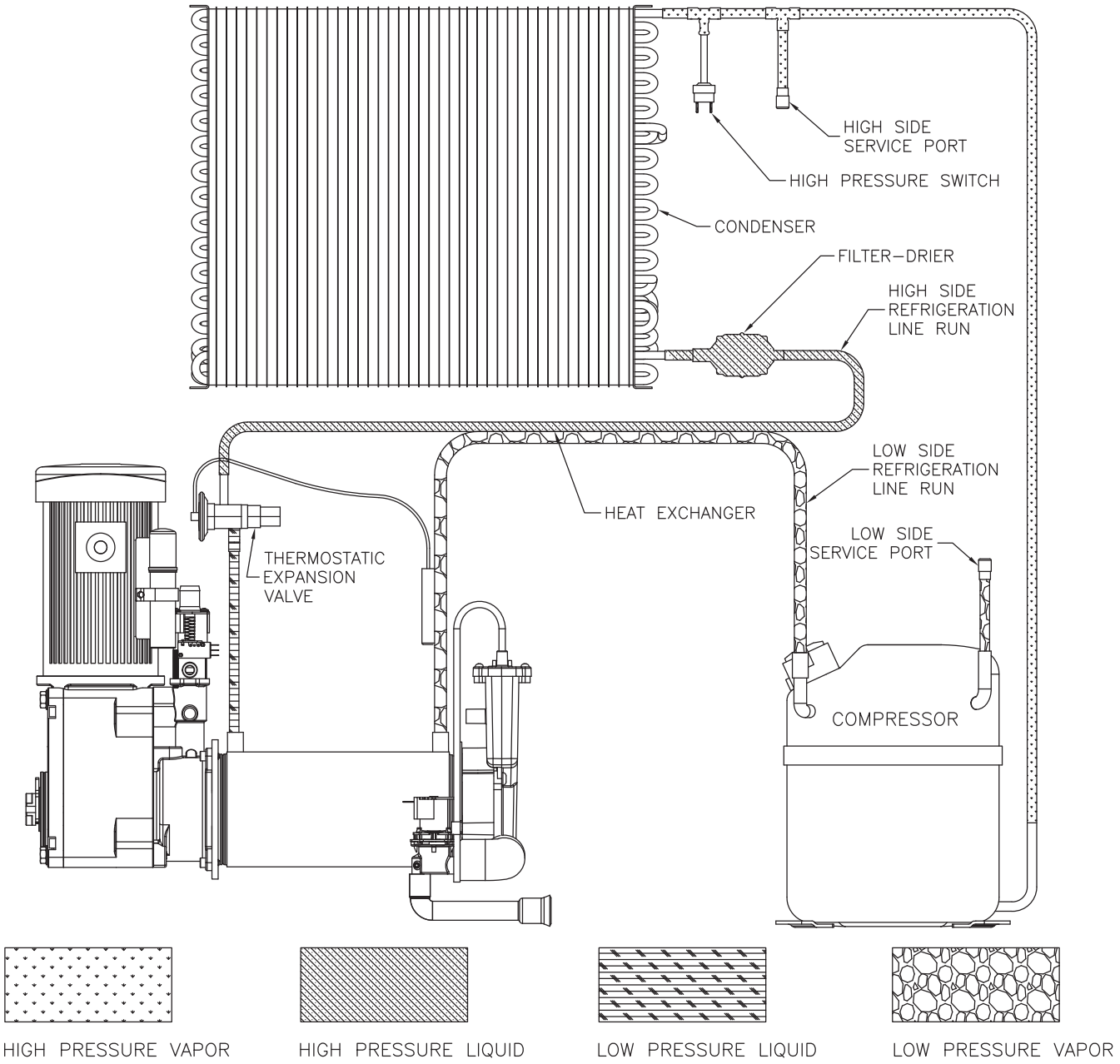

Refrigeration charge

All service on refrigeration systems must be performed in accordance with all federal, state and local laws. It is the responsibility of the technician to ensure that these requirements are met. Recharging ice machine to other than factory specifications will void the warranty.

R404A ice machine charge specifications

Model	Charge	Refrigerant type
HCC1010A (air-cooled)	33 oz (936 g)	R404A
HCC1010W (water-cooled)	18 oz (510 g)	R404A
HCC1410A (air-cooled)	35 oz (992 g)	R404A
HCC1410W (water-cooled)	18 oz (510 g)	R404A

Refrigerant replacement requirements

1. Non-contaminated refrigerant removed from any Follett refrigeration system can be recycled and returned to the same system after completing repairs. Recycled refrigerant must be stored in a clean, approved storage container. If additional refrigerant is required, virgin or reclaimed refrigerant that meets ARI standard 700-88 must be used.
2. In the event of system contamination (for example, a compressor burn out, refrigerant leak, presence of non-condensibles or moisture), the system must be repaired, evacuated and recharged using virgin or reclaimed refrigerant that meets ARI standard 700-88.
3. Follett Corporation does not approve of recovered refrigerants. Improper refrigeration servicing procedures will void the factory warranty.

Evacuation

Evacuate the system to a level of 500 microns. When the 500 micron level is reached, close all valves. Allow the system to sit for approximately 20 minutes. During this period the system pressure should not rise. If the system pressure rises and stabilizes there is moisture in the system and further evacuation is needed. If the pressure continues to rise check the system for leaks.

Ambients	Minimum	Maximum
Air temperature[1]	50 F/10 C	100 F/37.8 C
Water temperature[2]	45 F/7 C	90 F/32.2 C

[1]Ambient air temperature is measured at the air-cooled condenser coil inlet.
[2]Ambient water temperature is measured at the water feed valve inlet.

Ice capacity test

Ice machine production capacity can only be determined by weighing ice produced in a specific time period.

1. Replace all panels on ice machine.
2. Run ice machine for at least 15 minutes.
3. Weigh and record weight of container used to catch ice.
4. Catch ice for 15 or 20 minutes.
5. Weigh harvested ice and record total weight.
6. Subtract weight of container from total weight.
7. Convert fractions of pounds to decimal equivalents (ex. 6 lbs 8oz = 6.5 lbs).
8. Calculate production using following formula:

$$\frac{\text{1440 min. x wt. of ice produced}}{\text{Total test time in minutes}} = \text{Production capacity/24 hr.}$$

9. Calculated amount per 24 hours should be checked against rated capacity for same ambient and water temperatures in Ice Production Tables.

Troubleshooting

Please see “Service” section for a description of each function.

Ice machine disposition	Possible causes	Corrective action
Legend: ● ON ○ OFF ◐ ON or OFF ⊗ FLASHING		
1. Ice machine is in running condition but not making ice. CLEANER FULL ○ DRAIN CLOG ○ HI PRESS ○ HI AMPS ○ SERVICE ○ MAINT/CLEAN ○ LOW WATER ○ TIME DELAY ○ NOT USED ○ MAKING ICE ● LOW BIN ● POWER ON ⊗	1. Defective compressor. 2. Defective start relay. 3. Defective start capacitor. 4. Defective run capacitor. 5. Defective main contactor. 6. No output from PC board.	1. Replace compressor. 2. Replace start relay. 3. Replace start capacitor. 4. Replace run capacitor. 5. Replace main contactor. 6. Replace PC board.
2. Machine in TIME DELAY without full bin. CLEANER FULL ○ DRAIN CLOG ○ HI PRESS ○ HI AMPS ○ SERVICE ○ MAINT/CLEAN ○ LOW WATER ○ TIME DELAY ◐ NOT USED ○ MAKING ICE ○ LOW BIN ◐ POWER ON ⊗	1. Ice jamming due to improperly installed transport tube causing a false shuttle. 2. Shuttle stuck in up position. 3. Damaged or improperly installed thermostat (open). 4. Transport tube backed-out of coupling.	1. Correct transport tube routing. 2. Repair or replace shuttle mechanism. 3. Replace or reposition thermostat. 4. Correct coupling installation.
3. Ice machine is not making ice. HI AMPS. CLEANER FULL ○ DRAIN CLOG ○ HI PRESS ○ HI AMPS ● SERVICE ○ MAINT/CLEAN ○ LOW WATER ○ TIME DELAY ● NOT USED ○ MAKING ICE ○ LOW BIN ◐ POWER ON ⊗	1. Poor water quality causing ice to jam auger. 2. Damaged shuttle mechanism. 3. Intermittent drive output from PC board. Evaporator will freeze causing a HI AMPS error. 4. Gearmotor is unplugged.	1. Clean ice machine. Increase flushing frequency. Position TDS switch to High TDS setting. 2. Replace or repair shuttle mechanism. 3. Replace PC board. 4. Plug in gearmotor.
4. Ice machine is not making ice. HI PRESSURE. CLEANER FULL ○ DRAIN CLOG ○ HI PRESS ● HI AMPS ○ SERVICE ○ MAINT/CLEAN ○ LOW WATER ○ TIME DELAY ● NOT USED ○ MAKING ICE ○ LOW BIN ◐ POWER ON ⊗	1. High ambient temperatures >100 F (38 C). 2. Poor ventilation or air recirculation. 3. Clogged condenser (air-cooled). 4. No water flow through condenser (water-cooled). 5. Fan not working properly. No air flow. • Blocked fan blades • No fan output from PC board • Faulty fan motor	1. Air condition area to below 100 F (38 C). 2. Reposition ice machine or properly ventilate. Prevent ice machine exhaust from recirculating. 3. Clean condenser grille (air-cooled). 4. Restore water flow to condenser. 5. Correct air flow. • Remove any blockage from fan blades • Replace PC board • Replace fan motor
5. Ice machine is not making ice. Drain clog. CLEANER FULL ○ DRAIN CLOG ● HI PRESS ○ HI AMPS ○ SERVICE ○ MAINT/CLEAN ○ LOW WATER ○ TIME DELAY ○ NOT USED ○ MAKING ICE ○ LOW BIN ◐ POWER ON ⊗	1. Internal water leak touching chassis sensor.	1. Identify and repair leak. Clean/dry chassis and sensors and restart machine.
6. Ice machine is making ice. Drain clog. CLEANER FULL ○ DRAIN CLOG ● HI PRESS ○ HI AMPS ○ SERVICE ○ MAINT/CLEAN ○ LOW WATER ○ TIME DELAY ○ NOT USED ○ MAKING ICE ○ LOW BIN ○ POWER ON ⊗	1. Improper flow in drain system.	1. Correct/clean drain system.

Ice machine disposition	Possible causes	Corrective action
Legend: ● ON ○ OFF ◐ ON or OFF ⊗ FLASHING		
7. Ice machine is making ice. Excessive water in bin or coming into bin from transport tube. CLEANER FULL ○ DRAIN CLOG ○ HI PRESS ○ HI AMPS ○ SERVICE ○ MAINT/CLEAN ○ LOW WATER ○ TIME DELAY ○ NOT USED ○ MAKING ICE ● LOW BIN ● POWER ON ⊗	1. Failed water sensors. Processor assumes there is no water when there is water. 2. Blocked reservoir vent. 3. Defective water feed solenoid valve. Stuck in open position.	1. Clean or replace water probe assembly. Check wiring connections. 2. Clean or replace vent tubes. 3. Replace water feed solenoid valve.
8. Ice machine is not making ice. Lo water. CLEANER FULL ○ DRAIN CLOG ○ HI PRESS ○ HI AMPS ○ SERVICE ○ MAINT/CLEAN ○ LOW WATER ● TIME DELAY ◐ NOT USED ○ MAKING ICE ○ LOW BIN ● POWER ON ⊗	1. Water supply is insufficient. 2. Low water pressure. 3. Defective water feed solenoid valve. Stuck in closed position. 4. No water feed output from PC board. 5. Plugged screen on inlet side of fill solenoid. 6. Plugged check valve.	1. Restore water supply and check water filters. If evaporator was completely empty the reset button may have to be pressed to restart the ice machine. 2. Ice machine will eventually start when water reaches normal lo level. 3. Replace water feed solenoid valve. 4. Replace PC board. 5. Remove and clean screen. 6. Remove and clean.

ATTENTION!

To prevent circuit breaker overload, wait 5 minutes before restarting this unit. This allows the compressor to equalize and the evaporator to thaw.

Replacement parts

Evaporator assembly

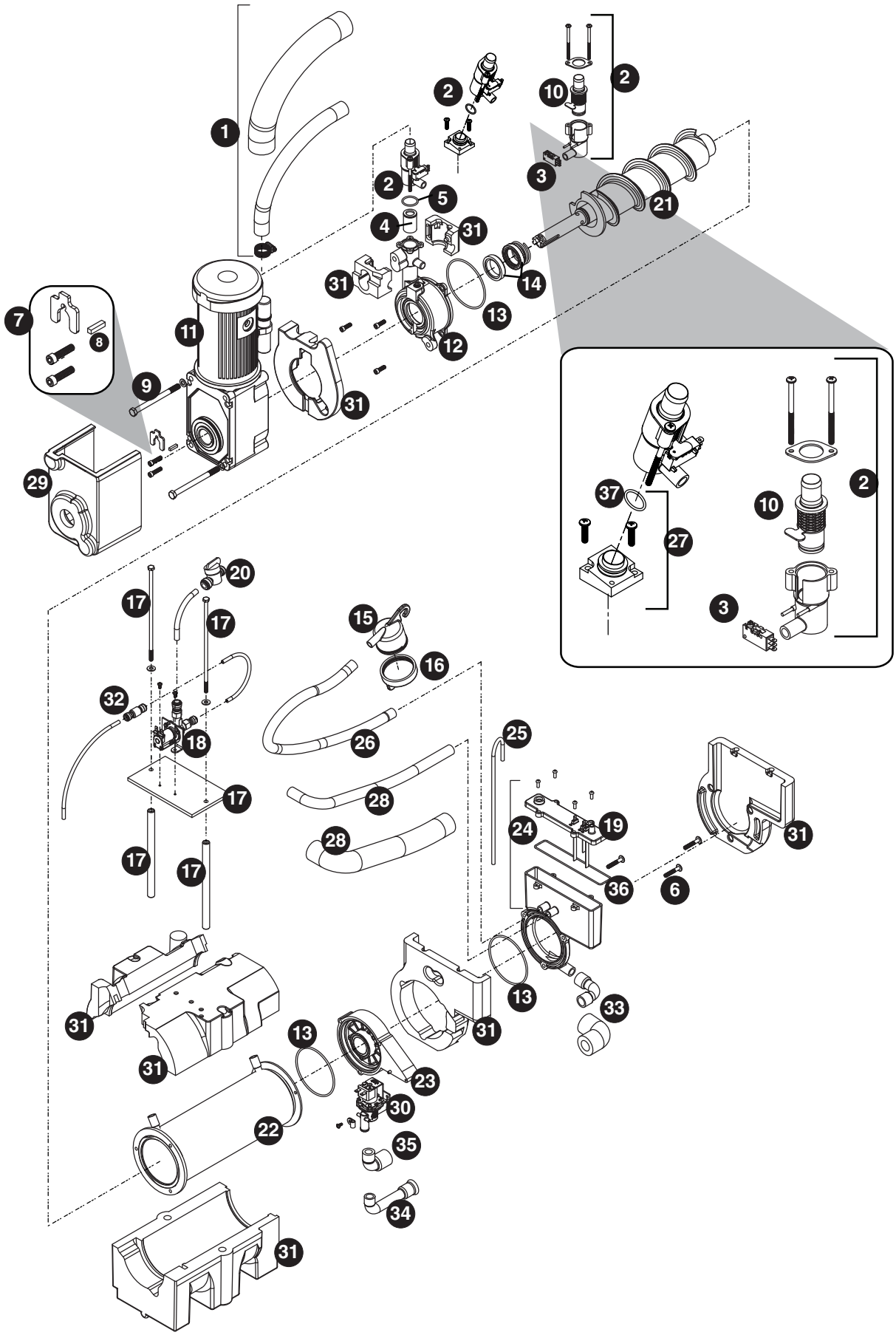

Reference #	Description	Part #
1	Tube, ice transport, insulated	01118181
2	Shuttle assembly	01118132
2	Shuttle assembly, IMDV	01118140
3	Switch, shuttle	00986083
4	Compression nozzle	01164912
5	O-ring, shuttle	01111848
6	Screw, reservoir (3 required)	206395
7	Auger hardware (includes screws, key, retainer)	01118611
8	Key	01164938
9	Bolt, gearmotor mounting (2) (self-contained units), includes washers	01118629
10	Cartridge assembly, shuttle spring	01118033
10	Cartridge, shuttle spring, IMDV	01118041
11	Gearmotor, 220 V (includes capacitor)	01118025
12	Main housing, self-contained	01117969
13	O ring	01004472
14	Seal, auger shaft	01039437
15	Cup, sanitizer	01164995
16	Cap, sanitizer	01118637
Not shown	Tubing, water, 3/8" OD	502719
Not shown	Tubing, water, 1/4" OD	502079
17	Retainer kit, evaporator	01118652
18	Solenoid, water feed (220 V)	01107515
19	Reservoir lid and sensors (includes screws and o-ring)	01118108
20	Valve, shut-off, water	502921
21	Auger, 1010 self-contained (includes seal, key, and auger hardware)	01117928 **(1010 only)**
21	Auger, 1410 self-contained (includes seal, key, and auger hardware)	01117936 **(1410 only)**
22	Evaporator, 1010	01118066 **(1010 only)**
22	Evaporator, 1410	01118074 **(1410 only)**
23	Rear bushing housing and bushing (includes (1) o-ring)	01118082
24	Reservoir assembly, water (includes lid)	01118116
25	Tube, vent (17" required)	502079
26	Tube, sanitizer	01118660
27	Kit, MicroChewblet	01161843
28	Tube, shuttle drain, insulated	01118678
29	Insulation, gearbox, 220 V	01165240
30	Solenoid, purge, 220 V	01105774
31	Insulation kit, 1010 evaporator/reservoir	01068055 **(1010 only)**
31	Insulation kit, 1410 evaporator/reservoir	01068063 **(1410 only)**
32	Check valve	01122381
33	Tube, drain, reservoir, insulated	01118124
34	Tube, drain, 1010	01099662 **(1010 only)**
35	Tube, drain, 1410	01099654 **(1410 only)**
36	O-ring, reservoir lid	01085588
Not shown	Kit, scale (includes reservoir, purge solenoid, drain tubes and fitting)	01122654
37	O-ring, MicroChewblet	01161850
Not shown	Drain kit (includes 2 ft. x 1" OD silicone tubing, 3/4" x 1" slip, 3/4" barb 3/4" FPT (2), 3/4" barb x 3/4" FPT elbow)	01210350

Air-cooled assembly

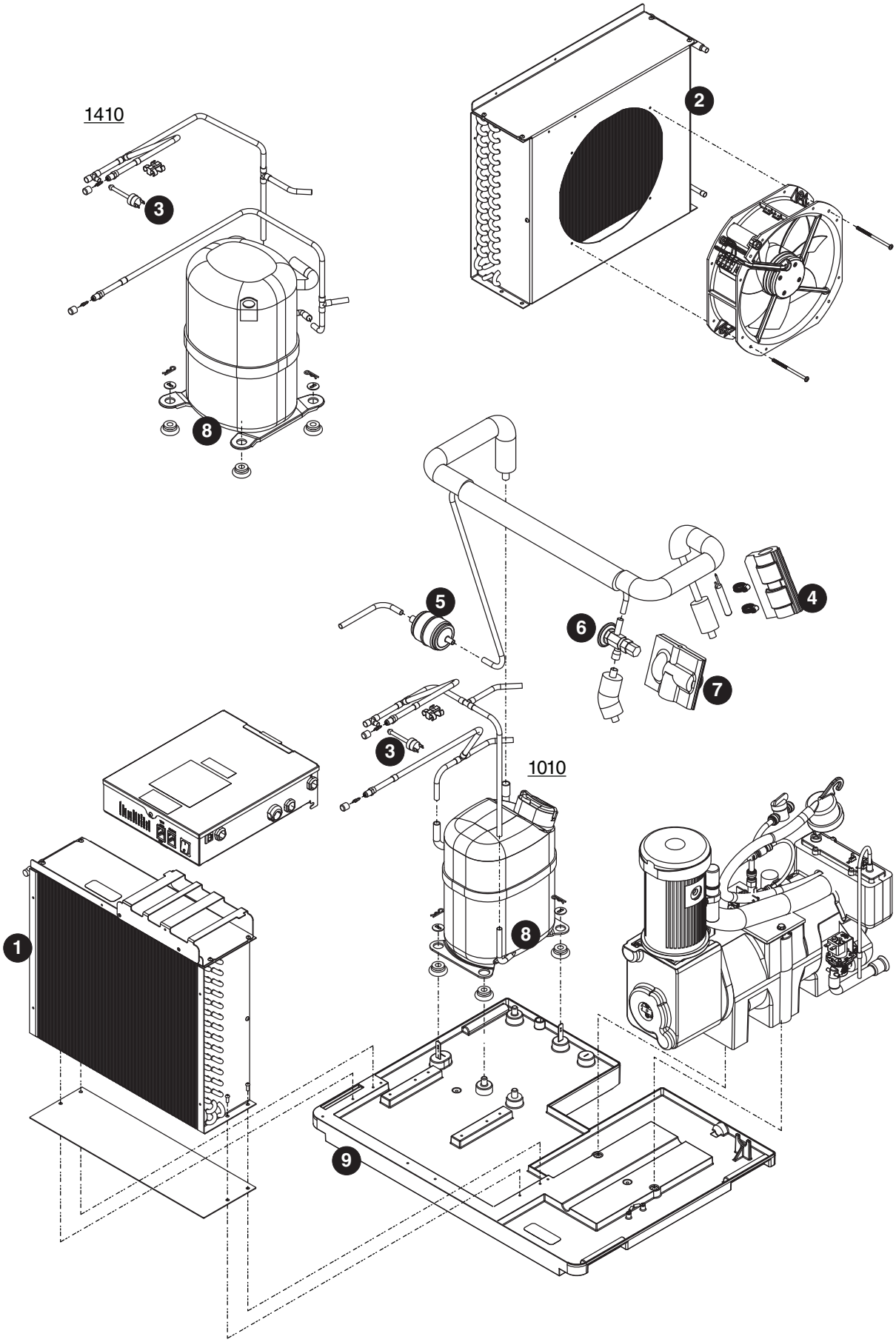

Reference #	Description	Part #
1	Condenser	01118892
2	Fan motor assembly - 220 V/60 Hz	01117803
3	Cut-out, high pressure safety	00117077
4	Insulation, bulb, TXV	00106534
5	Drier	00134593
6	Valve, expansion, thermal (includes insulation and (2) clamps)	01118942
7	Insulation, TXV (body and bulb)	502830
8	Compressor, 1010 - 220 V/60 Hz (includes start/run components and drier)	01117837 **(1010 only)**
8	Compressor, 1410 - 220 V/60 Hz (includes start/run components and drier)	01117845 **(1410 only)**
9	Base, ice machine	01117795

Water-cooled assembly

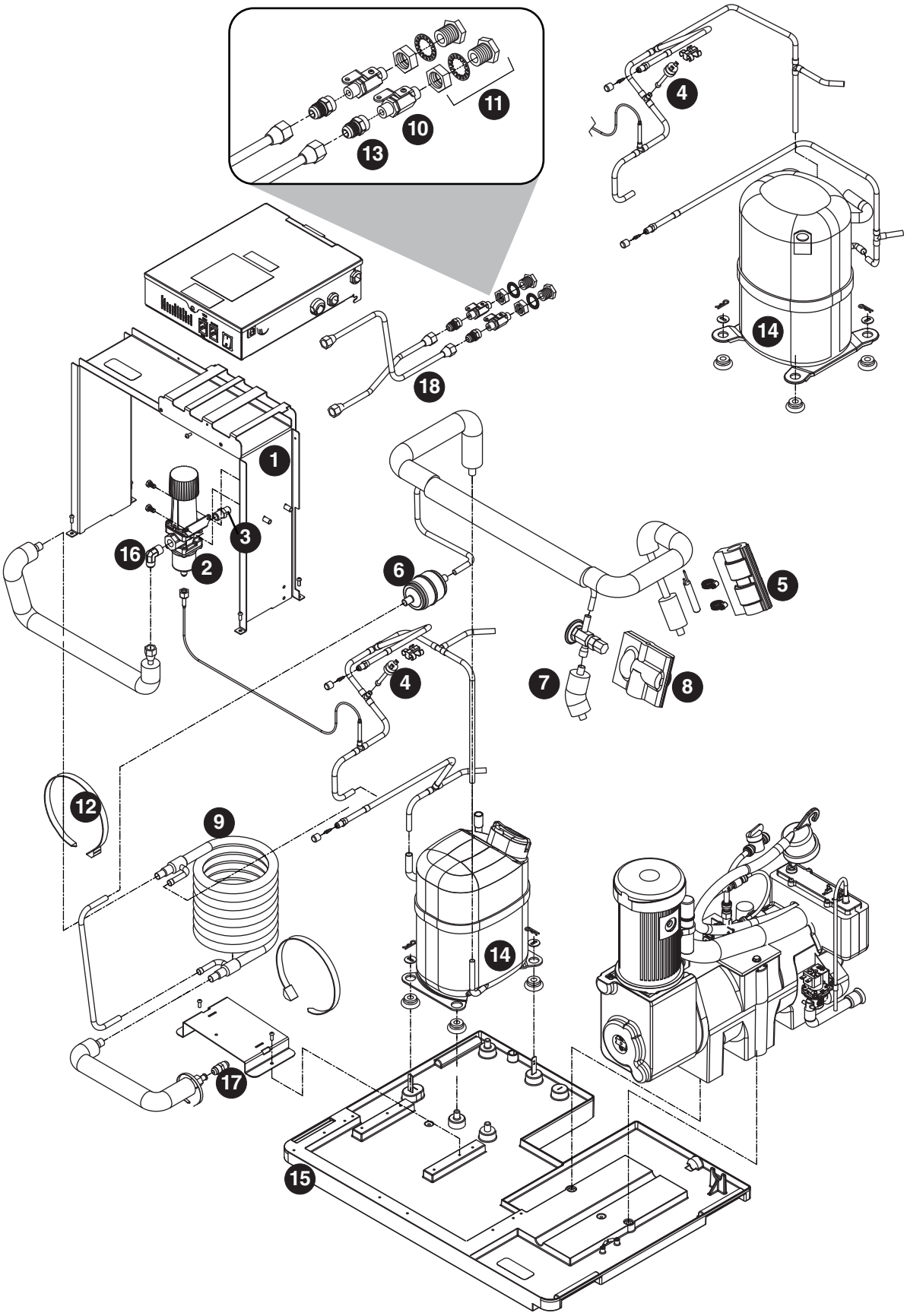

Reference #	Description	Part #
1	Electrical box support	01118934
2	Valve, water regulating	00131052
3	Union, water	202148
4	Cut-out, high pressure safety	00117077
5	Insulation, bulb, TXV	00106534
6	Drier	00134593
7	Valve, expansion, thermal (includes insulation and (2) clamps)	01118942
8	Insulation, TXV (body and bulb)	502830
9	Condenser, w/c, 1010/1410	00129502
10	Valve, shut-off, water	502222
11	Coupling	206411
12	Ty-rap	204584
13	Fitting, flared adapter	00996876
14	Compressor, 1010 - 220 V/60 Hz (includes start/run components and drier)	01117837 **(1010 only)**
14	Compressor, 1410 - 220 V/60 Hz (includes start/run components and drier)	01117845 **(1410 only)**
15	Base, ice machine	01117795
16	Elbow	00129486
17	Coupling, 3/8" double flare	01039494
18	Tubes, condenser inlet and exit	01122373

Electrical box

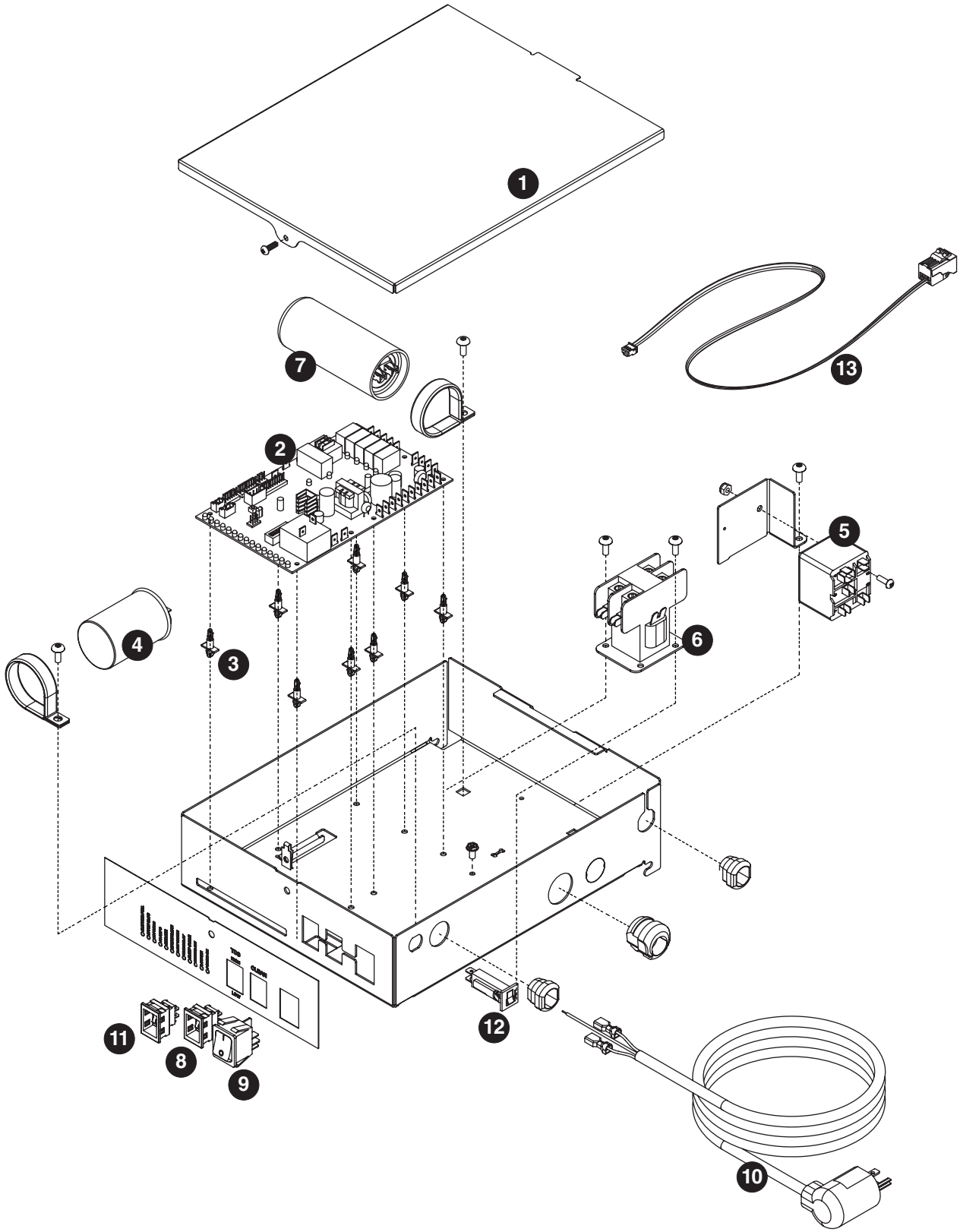

Reference #	Description	Part #
1	Cover, electrical box, air/water-cooled	01118967
2	Board, control, 220 V (includes stand-offs)	01117811
3	Stand-offs (set of 8)	00130906
4	Capacitor, compressor run - 220 V/60 Hz	00141689
5	Relay, compressor starting - 220 V/60 Hz, 1010	00173021 **(1010 only)**
5	Relay, compressor starting - 220 V/60 Hz, 1410	00977033 **(1410 only)**
6	Contactor - 220 V/60 Hz	00117010
7	Capacitor, compressor starting - 220 V/60 Hz, 1010	00173005 **(1010 only)**
7	Capacitor, compressor starting - 220 V/60 Hz, 1410	00185793 **(1410 only)**
8	Switch, evaporator clean	01165703
9	Switch, ice machine power	01165711
10	Cord, power, 220 V, 1010	00190561 **(1010 only)**
10	Cord, power, 220 V, 1410	00190579 **(1410 only)**
11	Switch, TDS	01165695
12	Circuit breaker, 4A	00126912
13	Cable, IMDV	01071596

Integration kit – top-mount and RIDE remote ice delivery

Top mount configuration

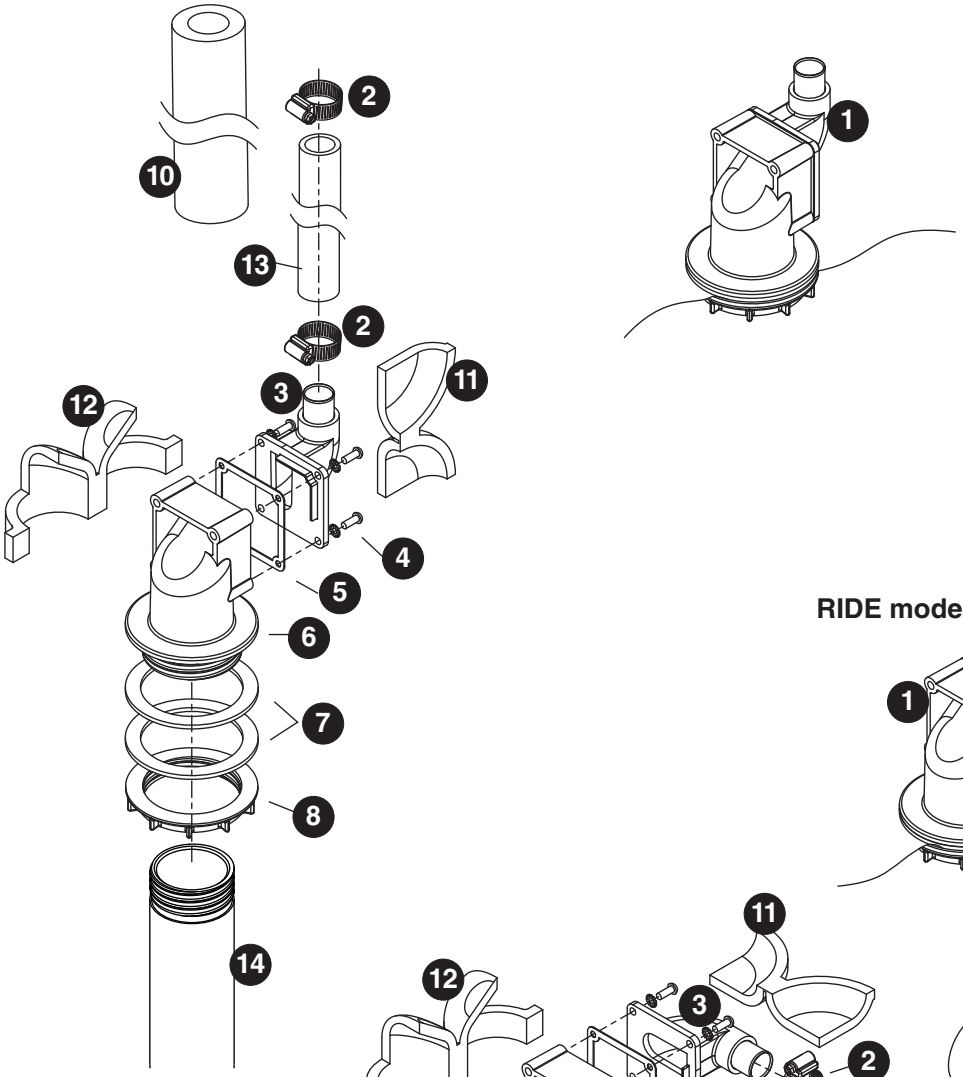

RIDE model configuration

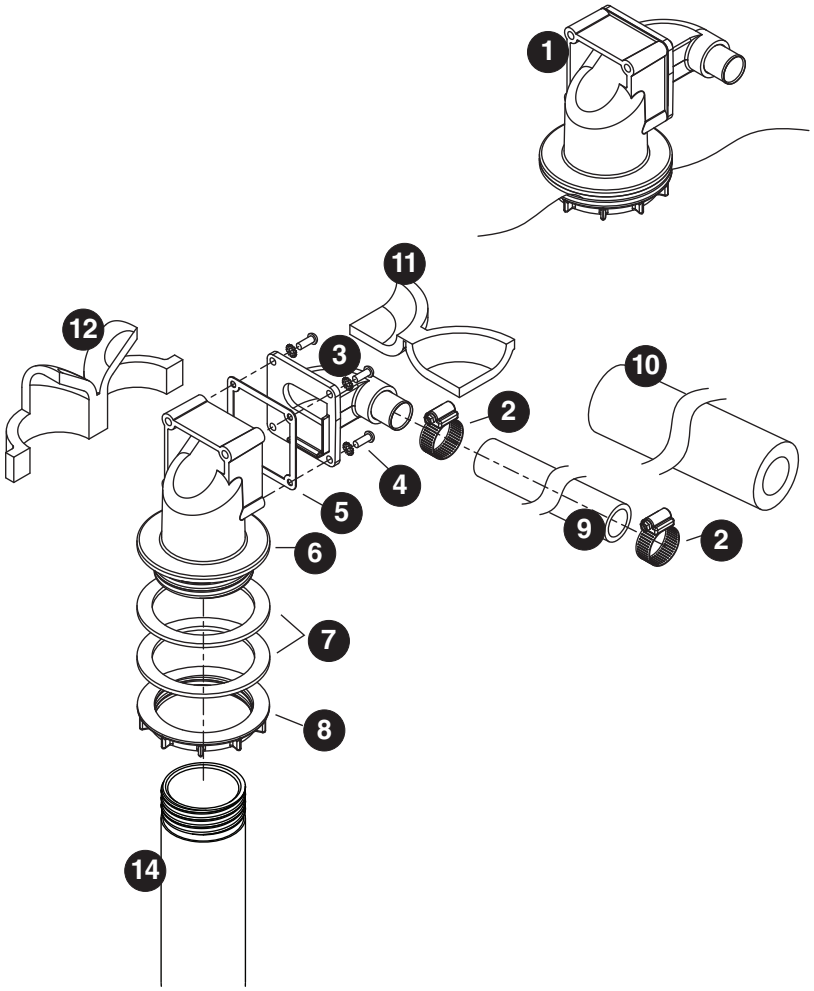

Reference #	Description	Part #
1	Shuttle actuator	00171322
2	Clamp	500377
3	Actuator elbow (includes 00167122 and 209100)	00171264
4	Screws	209100
5	Gasket	00167122
6	Actuator body	00171272
7	Gasket, coupling	00126532
8	Ring, locking (includes 00126532)	00171371
9	Ice transport tube, 10' (3 m)	00171280
9	Ice transport tube, 20' (6 m)	00171298
10	Insulation, transport tube	501176
Not shown	Insulated polywire ice transport tube, per foot	00174896
11	Insulation, elbow	00168922
12	Insulation, actuator	00168930
13	Ice transport tube, top mount, 30" (762 mm)	00171306
14	Extension-fill tube, 9"	00135723
14	Extension-fill tube, 4"	00153684
Not shown	Integration kit, top mount, Harmony or Bin	00171389
Not shown	Integration kit, RIDE model, Harmony or Bin, (includes 10' (3 m) of tube and insulation)	00171397
Not shown	Integration kit, drop in	00145334
Not shown	Integration kit, Cornelius PR150	00144774
Not shown	Integration kit, Vision (does not include ice tube)	00997171
Not shown	Diverter plate (single agitator Cornelius dispensers and left-hand dispense chute on dual-agitator Cornelius dispensers)	307277
Not shown	Diverter plate (right-hand dispense chute on dual-agitator dispensers)	00996207
Not shown	Follett SafeCLEAN Plus ice machine cleaner and sanitizer (case of 24 x 7 oz packets)	01050863
Not shown	Sani-Sponge kit	00132068
Not shown	High-capacity filter system	00978957
Not shown	Primary filter (1)	00978965
Not shown	Primary filter (6)	00978973
Not shown	Pre-filter (1)	00130211
Not shown	Pre-filter (12)	00954305
Not shown	IMSII or IMSIII sanitizer concentrate - 16 oz.	00979674
Not shown	Sponge, sanitary, pack of 24	01075431
Not shown	Kit, IMDV (included IMDV cartridge and communication cable)	01116177
Not shown	Tubing, silicone (per foot)	01169937

Skins assembly

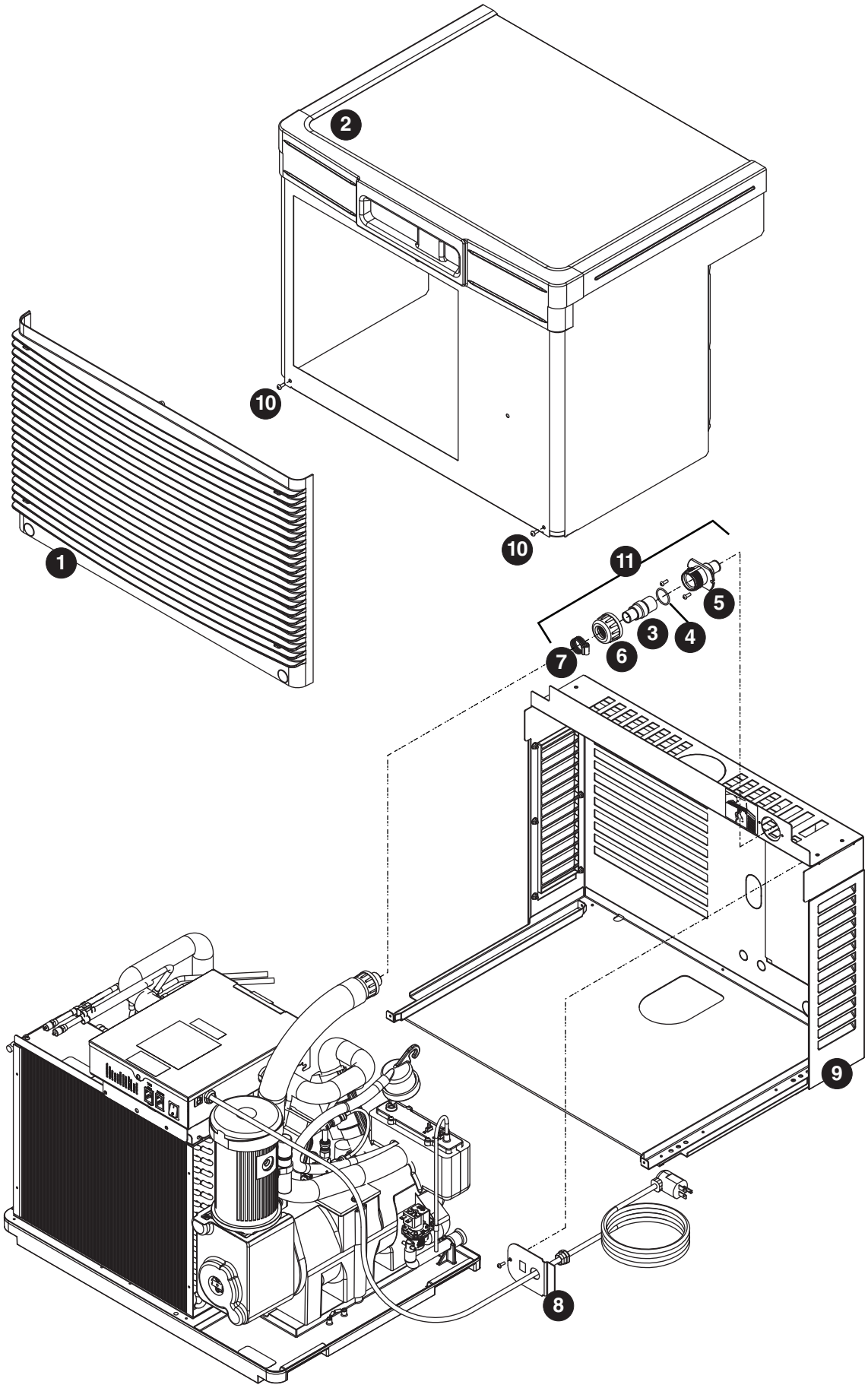

Reference #	Description	Part #
1	Grille, front	01017656
2	Front cover, air-cooled, 1010/1410	01119007
2	Front cover, water-cooled, 1010/1410	01119023
Not shown	Tubing, water, 3/8" OD	502719
3	Coupling (includes O-ring)	00171207
4	O-ring	00144675
5	Bulkhead fitting	00171215
6	Nut	00145342
7	Hose clamp	500377
8	Plate, strain relief	00192070
9	Louvered docking assembly, 1010 (includes strain relief plate, bulkhead fitting)	01119015 **(1010 only)**
9	Louvered docking station, 1410 (includes strain relief plate, bulkhead fitting)	01119031 **(1410 only)**
10	Screw	203460
11	Bulkhead connector kit	00171223
Not shown	Gasket, front cover (inside), per foot (4 feet required)	00939058
Not shown	Louver, intake/exhaust (25.75" W x 17.75" H)	01080399
Not shown	Gasket, air intake (front cover, outside) (7 feet required)	00131532
Not shown	Fitting, drain	00109728

Rejestracja gwarancji i ocena sprzętu

Dziękujemy za zakup urządzenia firmy Follett. Mamy nadzieję, że nasze urządzenia spełniają i przekraczają Państwa oczekiwania, gdyż naszym celem jest dostarczenie klientom wysoce wartościowych produktów i usług, zasługujących na ich pełne uznanie.

Prosimy zapoznać się z załączoną instrukcją instalacji i obsługi. Istotne jest przeprowadzenie instalacji zgodnie z wymogami producenta, co zapewni działanie urządzenia z maksymalną wydajnością.

Follett LLC nie będzie ponosić odpowiedzialności za szkody wtórne, wydatki, koszty podłączania lub odłączania lub jakiekolwiek straty wynikające z wady urządzenia.

Aby uzyskać szczegółowe informacje na temat warunków gwarancji, prosimy odwiedzić naszą strone internetową www.follettice.com/productwarranties.

Rejestracja gwarancji i ocena urządzenia to istotne czynności, ułatwiające nam utrzymanie aktualnych danych o miejscach instalacji naszych urządzeń i o ich działaniu. Prosimy o zarejestrowanie gwarancji na nabyte urządzenie firmy Follett na naszej witrynie www.follettice.com/support, gdzie należy wybrać Warranty Registration (Rejestracja gwarancji) i Equipment Evaluation (Ocena urządzenia). Jest to łatwe i nieskomplikowane, prosimy o znalezienie na to paru minut jeszcze dzisiaj. Na formularzu jest również miejsce na przekazanie nam komentarzy i informacji zwrotnych. Proszę podzielić się z nami swoimi wrażeniami, abyśmy mogli wykorzystać je w naszych ciągłych dążeniach do usprawnień.

Jesteśmy dumni z naszych znakomitych urządzeń i staramy się usilnie wspierać je znakomitą obsługą klienta i wsparciem technicznym. Chcielibyśmy wiedzieć, w jaki jeszcze sposób moglibyśmy Państwu pomóc. Z przyjemnością odpowiemy na Państwa pytania.

Registro de Garantía y Evaluación del Equipo

Gracias por haber elegido este producto Follett®. Esperamos que nuestro equipo cumpla o supere sus expectativas porque es nuestro objetivo ofrecer productos y servicios de gran valor que se ganen su plena confianza.

Le rogamos consulte el manual de instalación y de instrucciones adjunto, ya que es muy importante que la instalación se realice según las especificaciones de fábrica para que el equipo funcione a su máxima eficiencia.

Follett LLC no se hace responsable de los daños indirectos, costos, gastos por conexión y desconexión o pérdidas por causa de defecto de la máquina.

Si desea una información más completa sobre la garantía, visite nuestro sitio web www.follettice.com/productwarranties.

Las operaciones de registro de la garantía y evaluación del equipo son importantes para que podamos realizar un seguimiento de nuestro equipo y registrar el rendimiento de la maquinaria. Por favor, registre las garantías del equipo Follett en nuestro sitio web www.follettice.com/support y seleccione Registro de la Garantía y Evaluación del Equipo. Es muy sencillo, solo le llevará un momento realizar hoy mismo el registro. En el formulario incluimos un espacio en blanco para sus comentarios y opiniones. Infórmenos sobre su experiencia para que podamos incorporarla a nuestros continuos esfuerzos de mejora.

Nos enorgullecemos de producir un equipo excepcional y trabajamos duro para respaldarlo con un soporte técnico y un servicio de atención al cliente de primera. Le rogamos nos indique qué más podemos hacer para ayudarle. Estaremos encantados de responder a sus dudas.

Enregistrement de la garantie et évaluation de l'équipement

Merci d'avoir acheté un équipement Follett®. Notre objectif étant d'offrir des produits et des services de grande valeur vous satisfaisant pleinement, nous espérons que celui-ci satisfera, voire dépassera, vos attentes !

Veuillez consulter le manuel d'installation et d'exploitation. Il est important que l'installation soit réalisée conformément aux spécifications de l'usine, de sorte que votre équipement fonctionne à son rendement maximum.

Follett LLC n'est pas responsable de tout dommage consécutif, de toute dépense, de tout frais de raccordement ou de déconnexion, ni de toute perte liée à un défaut de la machine.

Pour lire la garantie dans son ensemble, visitez notre site Internet www.follettice.com/productwarranties.

L'enregistrement de la garantie et l'évaluation de l'équipement sont importants pour nous aider à suivre notre équipement et pour enregistrer les performances de la machine. Nous vous demandons donc d'enregistrer la garantie de votre équipement Follett sur notre site Internet, www.follettice.com/support, dans la section Warranty Registration and Equipment Evaluation. Cette opération est simple ; veuillez prendre un moment pour la réaliser aujourd'hui.

Le formulaire contient également un espace pour nous faire parvenir vos commentaires et un retour d'informations. Veuillez nous faire part de votre expérience pour que nous puissions prendre appui dessus pour poursuivre nos efforts constants d'amélioration.

Nous sommes fiers de produire des équipements exceptionnels et nous travaillons avec acharnement pour y associer une assistance à la clientèle et technique exceptionnelle. N'hésitez pas à nous indiquer dans quelle mesure nous pouvons vous aider. Nous serions ravis de répondre à vos questions.

Garantieregistrierung und Produktbeurteilung

Vielen Dank, dass Sie sich für ein Follett®-Produkt entschieden haben. Wir hoffen, dass unser Produkt Ihre Erwartungen erfüllen oder sogar übertreffen wird, weil wir uns zum Ziel gesetzt haben, hochwertige Produkte und Leistungen anzubieten, die Ihre uneingeschränkte Anerkennung verdienen werden!

Lesen Sie sich bitte die beiliegende Installations- und Betriebsanleitung durch. Es ist wichtig, dass die Installation entsprechend den Werksangaben erfolgt, damit Ihr Produkt mit maximalem Wirkungsgrad arbeiten kann.

Follett LLC ist nicht für Folgeschäden, Ausgaben, Gebühren für Anschluss oder Abschaltung oder Verluste aufgrund eines Defekts der Maschine haftbar.

Vollständige Garantieinformationen finden Sie auf unserer Website unter www.follettice.com/productwarranties.

Garantieregistrierung und Produktbeurteilung sind wichtig, damit wir einen Überblick über unsere Produkte behalten und ihre Effizienz bewerten können. Wir möchten Sie bitten, Garantien für Follett-Produkte auf unserer Website www.follettice.com/support zu registrieren und den Punkt „Garantieregistrierung und Produktbeurteilung" zu wählen. Es ist ganz einfach. Nehmen Sie sich bitte einen Moment Zeit, um die Registrierung heute vorzunehmen. Auf dem Formular ist auch Platz für Kommentare und Feedback vorhanden. Teilen Sie uns bitte Ihre Erfahrungen mit unseren Produkten mit, damit wir sie für unsere fortlaufenden Produktverbesserungen verwenden können.

Wir sind stolz darauf, dass wir besondere Produkte herstellen, und wir bemühen uns, unsere Produkte mit besonderem Kundendienst zu unterstützen. Lassen Sie uns bitte wissen, was wir noch für Sie tun können. Wir werden Ihre Fragen gerne beantworten.

Registrazione della garanzia e valutazione dell'attrezzatura

Grazie per aver acquistato un dispositivo Follett®. Ci auguriamo che il nostro prodotto soddisfi o superi le Sue aspettative, in quanto il nostro obiettivo è quello di offrire prodotti e servizi di alta qualità che soddisfino pienamente le vostre esigenze!

La preghiamo di leggere attentamente il manuale per l'installazione e per l'uso allegato. È infatti importante che l'installazione sia effettuata secondo le specifiche di fabbrica in modo tale che il dispositivo operi con la massima efficienza.

La Follett LLC non si assume alcuna responsabilità per danni conseguenti, spese, costi di collegamento o scollegamento o eventuali perdite dovute ad un difetto della macchina.

Per visualizzare i dettagli completi relativi alla garanzia, recarsi alla pagina www.follettice.com/productwarranties.

La registrazione della garanzia e la valutazione dell'attrezzatura sono importanti per aiutarci a tenere traccia dei nostri dispositivi e a registrare le prestazioni della macchina. Le chiediamo dunque di registrare le garanzie relative al dispositivo Follett sul nostro sito Web alla pagina www.follettice.com/support scegliendo Registrazione della garanzia e Valutazione dell'attrezzatura. Farlo è semplice; dedichi pochi minuti a registrare il prodotto oggi stesso. Sul modulo è inoltre previsto uno spazio in cui potrà fornirci i Suoi commenti e il Suo riscontro. Ci faccia sapere della Sua esperienza in modo che possiamo farne tesoro per il nostro continuo miglioramento.

Siamo orgogliosi di produrre macchinari di ottima qualità e lavoriamo sodo per offrire un servizio di assistenza clienti e tecnico di qualità altrettanto elevata. Ci faccia sapere come possiamo esserle di aiuto. Saremo lieti di rispondere a tutte le Sue domande.

Registo da garantia e avaliação do equipamento

Obrigado por ter adquirido equipamento Follett®. Fazemos votos de que o nosso equipamento cumpra ou exceda as suas expectativas, dado que temos por objetivo fornecer produtos e serviços de elevado valor que mereçam a sua total satisfação!

Pedimos-lhe que leia o manual de instalação e operações em anexo. É importante que a instalação seja levada a cabo de acordo com as especificações da fábrica, para que o seu equipamento funcione com a eficiência máxima.

A Follett LLC não assume a responsabilidade por quaisquer prejuízos indiretos, despesas, custos de ligação ou desligação ou quaisquer outras perdas decorrentes de um defeito na máquina.

Para consultar os dados da garantia, visite o nosso website www.follettice.com/productwarranties.

O registo da garantia e a avaliação do equipamento são importantes para nos ajudar a estar a par do nosso equipamento e registar o desempenho da máquina. Pedimos-lhe que registe as garantias de equipamento Follett no nosso website www.follettice.com/support, em "Warranty Registration and Equipment Evaluation". É muito simples; tire uns minutos para fazer o registo hoje mesmo. O formulário inclui também espaço para os seus comentários e feedback. Conte-nos a sua experiência para que possamos usá-la nos nossos esforços contínuos de melhoria.

Temos muito orgulho em produzir equipamento excecional e empenhamo-nos em proporcionar um apoio técnico e um apoio ao cliente igualmente excecionais. Diga-nos o que mais podemos fazer para o ajudar. Teremos todo o prazer em responder às suas perguntas.

Registrering af garanti og evaluering af udstyr

Tak for dit køb af Follett ®-udstyr. Forhåbentlig synes du, at vores udstyr lever op til eller overstiger dine forventninger, for vores målsætning er at levere produkter og serviceydelser af høj kvalitet, som du er fuldstændig tilfreds med!

Gennemlæs venligst den vedlagte installations- og driftsmanual. Det er vigtigt at installationen udføres i henhold til fabriksspecifikationerne, så dit udstyr kan fungere med maksimal effektivitet.

Follett LLC hæfter ikke for følgeskader, udgifter, tilslutnings- eller frakoblingsomkostninger eller nogen form for tab, der skyldes en maskindefekt.

Du kan læse de fulde oplysninger om garantien på vores website www.follettice.com/productwarranties.

Registrering af garantien og evaluering af udstyret er vigtigt for at hjælpe os med at følge op på vores udstyr og registrere maskinens ydelse. Vi beder dig registrere garantier på Follett-udstyr på vores website www.follettice.com/support og vælge Warranty Registration and Equipment Evaluation (Registrering af garanti og evaluering af udstyr). Det er nemt at gøre, så vi beder dig bruge et øjeblik på at registrere dig i dag. Formularen har også plads til, at du kan give os kommentarer og feedback. Fortæl os om dine erfaringer, så vi kan bruge dem i vores fortsatte bestræbelser på at forbedre os.

Vi sætter en ære i at fremstille udstyr i særklasse og arbejder hårdt på at kunne bakke udstyret op med fremragende kundeservice og teknisk support. Fortæl os, hvad vi ellers kan gøre for at hjælpe dig. Vi svarer gerne på dine spørgsmål.

Registratie van garanties en beoordeling van apparatuur

Gefeliciteerd met uw aankoop van Follett®-apparatuur. We hopen dat onze apparatuur uw verwachtingen invult of zelfs overstijgt, omdat we ernaar streven om hoogwaardige producten en diensten te leveren die u uitermate tevreden stellen!

Lees de bijgevoegde installatie- en bedieningshandleiding zorgvuldig door. Het is belangrijk dat de installatie uitgevoerd wordt volgens de fabrieksspecificaties, zodat uw apparatuur zo efficiënt mogelijk werkt.

Follett LLC is niet aansprakelijk voor enige gevolgschade, uitgaven, montage- of demontagekosten of enige door een defect van de machine geleden verliezen.

Bezoek onze website www.follettice.com/productwarranties voor alle garantiegegevens.

De registratie van garanties en de beoordeling van apparatuur is belangrijk voor ons om onze apparatuur te helpen traceren en de prestaties van de machine te registreren. We verzoeken u dan ook om garanties van Follett-uitrusting te registreren op onze website www.follettice.com/support en om “Warranty Registration” (Registratie van garanties) en “Equipment Evaluation” (Beoordeling van apparatuur) te kiezen. Gelieve hier even tijd voor vrij te maken. Het is namelijk zeer eenvoudig. Er is op het formulier ook plaats om opmerkingen en feedback te geven. Breng ons gerust op de hoogte over uw ervaring met onze apparatuur, zodat we ons kunnen blijven verbeteren.

We zijn trots op onze productie van uitstekende apparatuur en werken hard om dit bij te staan door een voortreffelijke klantendienst en technische ondersteuning. Aarzel echter niet om enige andere bijstand te vragen. We zullen uw vragen met plezier beantwoorden.

Garantiregistrering och utvärdering av utrustning

Tack för att du köpt utrustning från Follett®. Vi hoppas att du ska tycka att den uppfyller eller överträffar dina förväntningar, då vårt mål är att leverera produkter och tjänster av högt värde som gör dig helt nöjd!

Studera medföljande installations- och bruksanvisning. Det är viktigt att installationen genomförs enligt fabrikens anvisningar så att din utrustning arbetar med högsta effektivitet.

Follett LLC ansvarar inte för följdskador, kostnader, avgifter eller förluster som orsakats av fel på maskinen.

Fullständiga garantivillkor finns på vår hemsida www.follettice.com/productwarranties.

Garantiregistrering och utvärdering av utrustning är viktig för oss så att vi kan följa upp vär ultrustning och dess funktion. Vi vill att du registrerar Folletts utrustningsgaranti på vår hemsida www.follettice.com/support, där du väljer Garantiregistrering och produktutvärdering. Det är enkelt att göra, så ta dig tid en minut och registrera dig idag. Det finns också utrymme på blanketten för kommentarer och synpunkter. Berätta för oss vad du tycker så att vi kan använda det i våra ansträngningar att alltid bli bättre.

Vi är stolta över att producera överlägsen utrustning och vi arbetar hårt med att stötta den med överlägset kundansvar och tekniskt stöd. Tala om för oss vad vi kan göra mer för att hjälpa dig. Vi svarar gärna på dina frågor.

Warranty Registration and Equipment Evaluation

Thank you for purchasing Follett® equipment. We hope you find that our equipment meets or exceeds your expectations, as our goal is to deliver high value products and services that earn your complete satisfaction!

Please review the enclosed installation and operations manual. It is important that the installation be performed to factory specifications, so your equipment operates to its maximum efficiency.

Follett LLC will not be liable for any consequential damages, expenses, connecting or disconnecting charges or any losses resulting from a defect of the machine.

For full warranty details, visit our website www.follettice.com/productwarranties.

Warranty registration and equipment evaluation is important to help us keep track of our equipment and to record the machine’s performance. We request that you register Follett equipment warranties on our website www.follettice.com/support and choose Warranty Registration and Equipment Evaluation. It’s simple to do; please take a moment to register today. There is also space on the form to provide us with comments and feedback. Please let us know about your experience so we can capture it for our continuous improvement efforts.

We pride ourselves on producing outstanding equipment and we work hard to back it up with outstanding customer and technical support. Please let us know what else we can do to assist you. We would be happy to answer your questions.

Horizon, Harmony, Ice Manager, SafeCLEAN, Sani-Sponge and Vision are trademarks of Follett LLC.
Chewblet, RIDE and Follett are registered trademarks of Follett LLC, registered in the US.

FOLLETT®
Innovative solutions, inspired by ice

801 Church Lane • Easton, PA 18040, USA
Toll free (877) 612-5086 • +1 (610) 252-7301
www.follettice.com

01096106R02
© Follett LLC 1/18