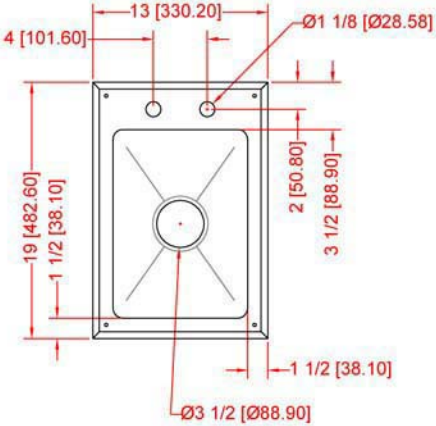

Drop In Sink ,16GA.304S/S top
18GA.304S/S(6% nickel) bowl
One Compartment (10"X14"X10")
Mounting Brackets, Faucet and 3.5" drain basket included
Carton box packing

REGENCY
Stainless Steel Commercial
Tables And Sinks

NSF

Model: 600DI1101410

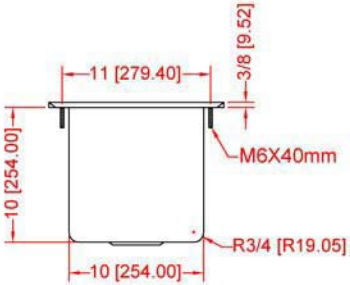

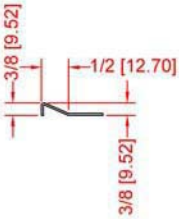

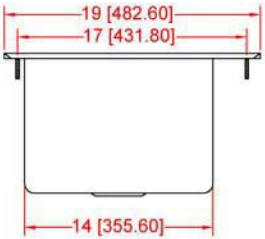

600DI1101410