ITEM#

INTELLIGENT TOAST-QWIK® CONVEYOR TOASTERS

Models: ITQ-1000-1C, -1750-2C

Hatco's Intelligent Toast-Qwik® toasters are fast, reliable, and extremely versatile. Individually-controlled top and bottom heating elements, a multi-speed two-directional conveyor belt, and optical product sensors provide the ability to produce a variety of menu items.

FLEXIBILITY

The versatility of the Hatco Intelligent Toast Quick will allow the operator to toast multiple products at the touch of the button, changing easily from bagels to croissants to Texas Toast to hash browns, as well as melting cheese and finishing small food products. The unit is easy to operate and requires minimal training to achieve consistent repeatable results.

Hatco's ITQ has the ability to change from one product to another coupled with rapid toasting makes the ITQ the smartest toaster available. The unit can easily take the place of the current toasting platform and add versatility and future menu expansion along with energy efficiency presenting the operator with cost savings.

QUALITY

The following features assure the finest performance for years to come:

- Programmable touchpad control with display
- Single and Dual toasters have the ability to hold up to eighteen product settings
- Hatco's Spot-On® Technology senses when product is placed on the conveyor and activates the unit
- Hatco's patented ColorGuard Sensing System monitors and adjusts conveyor speed and temperature during high usage periods to ensure toast color uniformity
- Power Save mode activates automatically after a specific period of time, or by pressing the Power Save on the touchpad
- USB port located on front of the unit allows for easy transfer of program changes and product usage information
- Includes removable crumb tray, toast chute, 1" (25 mm) adjustable legs, and 6' (1829 mm) cord and plug.
- Cool touch sides and back panel
- Hardcoat (non stick) return ramp
- Easy to clean, with removable crumb tray(s) and collector ramp. There is minimal operator maintenance required, with self cleaning elements and no maintenance motor and conveyor drives

ONE YEAR ON-SITE PARTS AND LABOR WARRANTY, PLUS ONE ADDITIONAL YEAR PATS-ONLY WARRANTY ON ALL METAL SHEATHED HEATING ELEMENTS

with Spot•ON® technology

ITQ-1000-1C

ITQ-1750-2C

The conveyor can operate in four different modes:

1. Continuous Through Put -
   Just like a standard conveyor toaster
2. Single Product Mode -
   A single product can be toasted and then the conveyor stops
3. In and Back Out Mode -
   The product is drawn into the chamber, pauses for a programed amount of time, and then backs out of the chamber
4. In, Pause, then Continuos Through Put -
   The product is drawn into the chamber, pauses for a programed amount of time, and then continuous through put

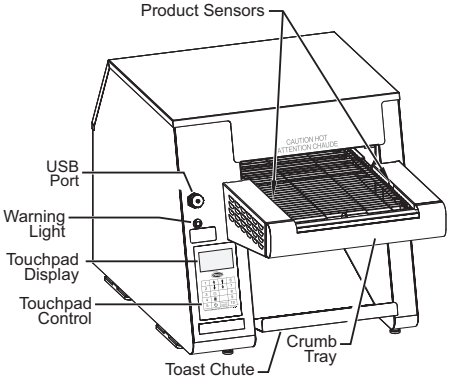

ANSI/NSF 4

HATCO CORPORATION P.O. Box 340500 Milwaukee, WI 53234-0500 U.S.A.
(800) 558-0607 • (414) 671-6350 • Fax (800) 543-7521 • Int'l Fax (414) 671-3976
www.hatcocorp.com • E-mail: equipsales@hatcocorp.com

Form No. ITQ Spec Sheet

Printed in U.S.A.
September 2013

ITEM#

INTELLIGENT TOAST-QWIK® CONVEYOR TOASTERS

Models: ITQ-1000-1C, -1750-2C

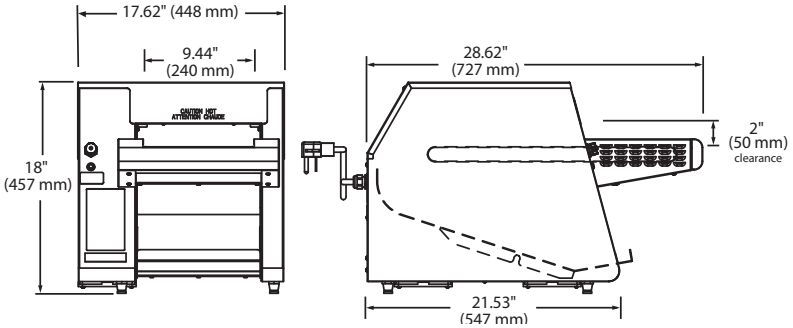

Model ITQ-1000-1C

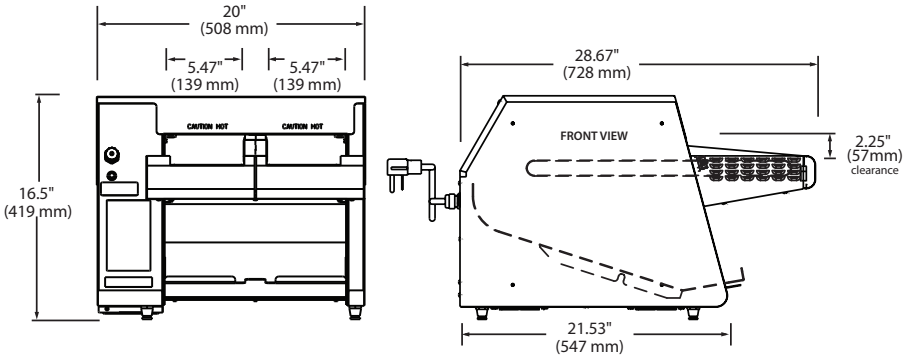

Model ITQ-1750-2C

SPECIFICATIONS

Model†	Volts	Watts	Amps	Cap. per minute†	Shipping Weight
ITQ-1000-1C©	208-240	3230-4300	15.5-17.9	17	68 (31 kg)
ITQ-1750-2C	208	4960	23.8	30	100 (45 kg)
ITQ-1750-2C	240	4960	20.7	30	100 (45 kg)

© Unit is designed to operate on supply voltages between 208V and 240V

† Toasting capacity may vary by product. Toasting of coated products not recommended.

DIMENSIONS
ITQ-1000-1C: 17.62"W x 28.62"D x 18"H (448 x 727 x 457 mm).
ITQ-1750-2C: 20"W x 28.67"D x 16.5"H (508 x 728 x 419 mm).

OPENING DIMENSIONS
ITQ-1000-1C: 2"H (50 mm).
ITQ-1750-2C: 2.25"H (57 mm).

VOLTAGE
ITQ-1000-1C: 208-240 volt, 60 Hz, single phase.
ITQ-1750-2C: 208 and 240 volt, 60 Hz, single phase.

CORD LOCATION
Left center on back of unit.

PLUG CONFIGURATIONS

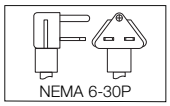

Accessories

❑ Food paddle

PRODUCT SPECS

Conveyor Toaster

The electric Intelligent Toast-Quick® Conveyor Toaster shall be a Hatco Model ... as manufactured by the Hatco Corporation, Milwaukee, WI 53234 U.S.A.

The toaster shall have the capacity to toast up to ... pieces per minute and it shall be rated at ... kW, ... volts, single phase.

The toaster shall be of stainless steel design and shall include a front mounted control panel with state-of-the-art electronic top and bottom heat controls, Spot-On® technology, ColorGuard sensing system (patented), variable speed control, power save mode with indicator light and a toast collector pan.

The toaster will have metal sheathed heating elements and factory attached UL listed cord and plug.

One year on-site parts and labor warranty, plus one additional year parts-only warranty on all metal sheathed heating elements, with 24/7 service (U.S. and Canada only).

HATCO CORPORATION P.O. Box 340500 Milwaukee, WI 53234-0500 U.S.A. • (800) 558-0607 • (414) 671-6350
Fax (800) 543-7521 • Int'l. Fax (414) 671-3976 • www.hatcocorp.com • E-mail: equipsales@hatcocorp.com

Form No. ITQ Spec Sheet

Printed in U.S.A.
September 2013